SB 152

Spare parts list

Hydraulic breaker

SB 152 from s/n BES043707

© 2015 Construction Tools PC AB | No. 9800041001 | 2015-05

General information

This spare parts list applies to the following:

Part number	Description
8460030040	SB 152

Use only authorized parts. Any damage or malfunction caused by the use of unauthorized parts is not covered by Warranty or Product Liability.
Any unauthorized use or copying of the contents or any part thereof is prohibited. This applies in particular to trademarks, model denominations, part numbers, and drawings.

Instructions for use
This spare parts list contains no safety regulations and is merely intended to assist in the ordering of spare parts.
For information about operating, servicing, or repairing, the relevant Safety and operating instructions must be consulted at all costs.
Please observe the safety instructions listed in the relevant Safety and operating instructions!

ACDE
Nederland B.V.

Contents

Spare parts list
Spare parts list . . . 1
Optional parts - Bushing oversize, complete . . . 5
Optional parts - Restrictor, complete . . . 7

Tightening torque
Tightening torque . . . 9

Working tools
Working tools SB 152 . . . 11

Accessories
Optional equipment . . . 14
Hydraulic hoses . . . 17

Kits
Label kit . . . 19
Seal kit . . . 21
Lower hammer part kit . . . 23
Accumulator repair kit . . . 25

Dimensions
Dimensions (mm) . . . 27

ACDE
Nederland B.V.

Spare parts list Spare parts list

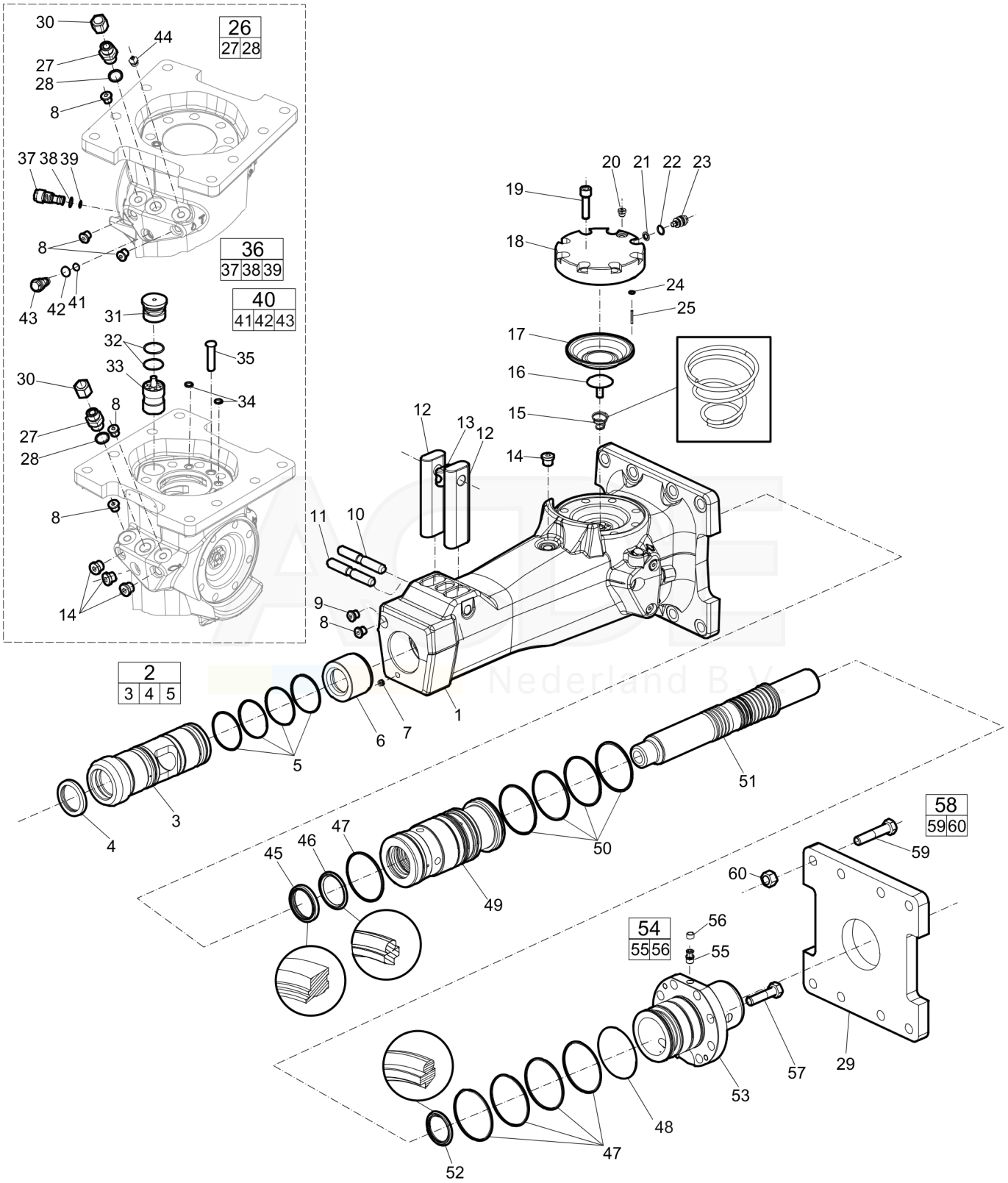

Item	Part No.	Name	Qty	L
1	-	Breaker body	1	
2	3315353980	Bushing standard, complete	1	A
3	--	Bushing, ø75 mm, ø2.95 in.	1	
4	3315356400	Scraper ring	1	
5	0663210289	O-ring, 64.5 x 3 mm (90 shore), 2.53 x 0.12 in.	4	
6	3315291800	Stop ring	1	
7	0686100009	Plug, Ø10 mm, Ø0.39 in.	1	
8	0686644207	Plug, VSTI R 1/4-ED	6	B
9	3315395200	Water nozzle	1	
10	3315293000	Lock pin	1	
11	0108169126	Spring pin, option	1	
12	3315147000	Tool retainer	2	
13	3315141900	Lock buffer	1	
14	0686371801	Plug, VSTI R 3⁄8 - ED	4	C
15	3315293300	Coil spring	1	
16	3315288900	Diaphragm support	1	
17	3315289000	Diaphragm	1	
18	3315282400	Accumulator house	1	
19	0211196534	Hexagon socket screw, Screw with extra high fatigue strength.	8	D
20	0686371805	Plug VSTI R 1⁄8-ED	1	E
21	3115329002	Seal ring 8 x 14 x 2.4 mm (90 shore), 0.31 x 0.55 x 0.09 in.	1	
22	0663212000	O-ring 13.3 x 2.4 mm (70 shore), 0.52 x 0.09 in.	1	
23	3315366000	Charge valve	1	
24	0663211400	O-ring 7.3 x 2.4 mm (90 shore), 0.28 x 0.09 in.	1	
25	0101414000	Parallel pin D4 x 25 mm, D4 x 0.98 in.	1	
26	0580001846	Nipple, complete (Valid from s/n BES043707)	1	F
27	--	Nipple	1	
28	0664000003	Seal ring	1	
29	3315304300	Base plate with through borings	1	
30	3361353486	Cap(Valid from s/n BES043707)	2	
31	3315364000	Valve cover	1	
32	0663211490	O-ring, 31. 2 x 3 mm, 1.23 x 0.12 in.	2	
33	3315291900	Control valve	1	
34	0665090014	Seal, SCR 10 x 16 x 2.4 mm	2	
35	3315305000	Plug	1	
36	3315335000	Pressure relief valve, complete	1	
.37	--	Pressure relief valve	1	

ACDE Nederland B.V.

This page intentionally left blank

ACDE Nederland B.V.

Item	Part No.	Name	Qty	L
.38	0663903201	O-ring, 15.6 x 1.78 mm , 0.61 x 0.07 in. (90 shore)	1	
.39	0663905401	O-ring, 10.82 x 1.78 mm , 0.43 x 0.07 in. (90 shore)	1	
40	3315369551	Restrictor standard, complete	1	G
.41	0663905401	O-ring, 10.82 x 1.78 mm , 0.43 x 0.07 in. (90 shore)	1	
.42	0663903201	O-ring, 15.6 x 1.78 mm , 0.61 x 0.07 in. (90 shore)	1	
43	--	Restrictor, ø5.1 mm, ø0.20 in.	1	
44	0544215300	Grease nipple, ISO 7-R 1⁄4	1	H
45	0665909954	Wiper	1	
46	0665070131	Piston rod seal	1	
47	0663211456	O-ring, 86 x 3 mm (90 shore), 3.39 x 0.12 in.	5	
48	0663210631	O-ring, 88.62 x 1.78 mm (90 shore), 3.49 x 0.07 in.	1	
49	3315291300	Liner	1	
50	0663210053	O-ring, 84.5 x 3 mm (90 shore), 3.33 x 0.12 in.	4	
51	3315291700	Piston	1	
52	0665070132	Piston rod seal	1	
53	3315293900	Back head	1	
54	3315244881	Check valve, complete	1	
55	--	Check valve	1	
56	3315280800	Valve rubber	1	
57	0147148103	Hex. head screw, M16 x 60 mm 8.8	8	
58	3315296490	Bolt kit	1	
59	--	Screw, M16 x 75 mm 8.8 fzb	8	
60	--	Nut, M16	8	

Comments for Page: Spare parts list

(L)OCAL REMARKS

A | For more bushings, see section "Bushing oversize, complete".

B | VSTI R 1/4 - ED

C | VSTI R 3/8 - ED

D | Screw with extra high fatigue strength.

E | VSTI R 1/8 - ED

F | There are two "Nipple, complete" on the machine.

G | Formore restrictors, see section "Restrictor, complete".

H | ISO 7-R 1/4

Spare parts list Optional parts - Bushing oversize, complete

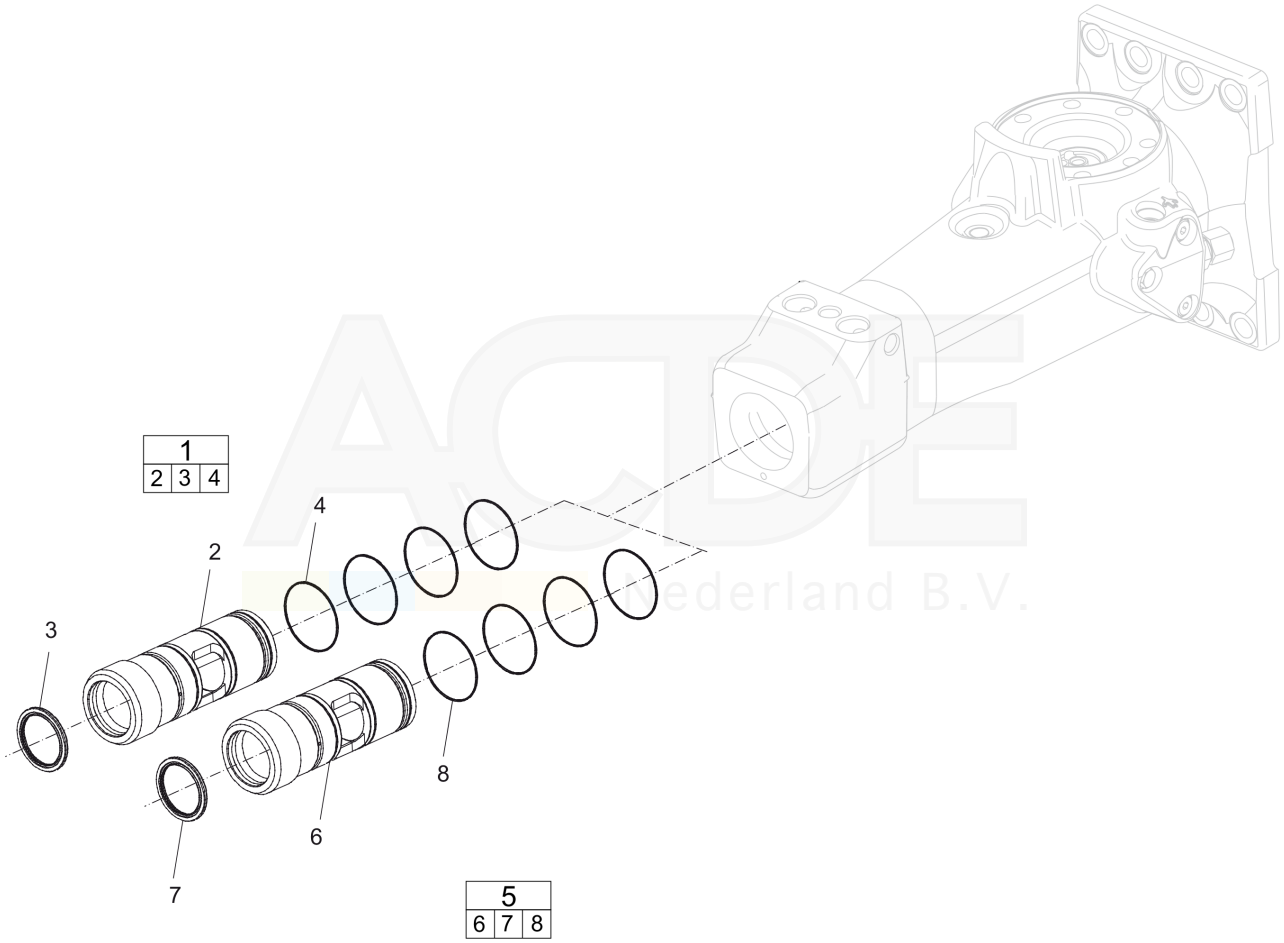

Item	Part No.	Name	Qty	L
1	3315353960	Bushing oversize, complete	1	
.2	--	Bushing, Ø76.5 mm, Ø3.01 in.	1	
.3	3315356400	Scraper ring	1	
.4	0663210612	O RING	4	
5	3315353963	Bushing oversize, complete	1	
.6	--	Bushing, Ø78 mm, Ø3.07 in.	1	
.7	3315356400	Scraper ring	1	
.8	0663210612	O RING	4	

ACDE Nederland B.V.

Spare parts list Optional parts - Restrictor, complete

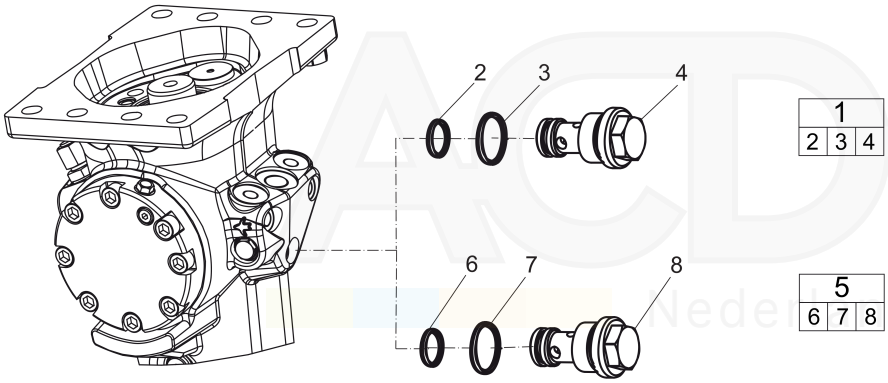

1		
2	3	4

5		
6	7	8

ACDE Nederland B.V.

Item	Part No.	Name	Qty	L
1	3315369535	Restrictor, complete	1	
2	--	O-ring, 10.82 x 1.78 mm, 0.43 x 0.07 in.	1	
3	--	O-ring, 15.6 x 1.78 mm, 0.61 x 0.07 in.	1	
4	--	Restrictor, Ø4.5 mm, Ø0.18 in.	1	
5	3315369540	Restrictor, complete	1	
.6	--	O-ring, 10.82 x 1.78 mm, 0.43 x 0.07 in.	1	
.6	--	O-ring, 10.82 x 1.78 mm, 0.43 x 0.07 in.	1	
.7	--	O-ring, 15.6 x 1.78 mm, 0.61 x 0.07 in.	1	
.7	--	O-ring, 15.6 x 1.78 mm, 0.61 x 0.07 in.	1	
.8	--	Restrictor, Ø4.0 mm, Ø0.16 in.	1	
6	--	O-ring, 10.82 x 1.78 mm, 0.43 x 0.07 in.	1	
7	--	O-ring, 15.6 x 1.78 mm, 0.61 x 0.07 in.	1	

ACDE Nederland B.V.

Tightening torque Tightening torque

NO EXPLODED VIEW
AVAILABLE
FOR THIS BOM

ACE Nederland B.V.

Item	Part No.	Name	Qty	L
8	-	Hexagon socket plug - 30 Nm	-	A
14	-	Hexagon socket plug - 80 Nm	-	B
19	-	Hexagon socket screw - 120 Nm	-	C
20	-	Hexagon socket plug - 20 Nm	-	
23	-	Charge valve - 20 Nm	-	
27	-	Nipple - 210 Nm	-	
37	-	Pressure relief valve - 80 Nm	-	
43	-	Restrictor - 80 Nm	-	
44	-	Grease nipple - 30 Nm	-	
55	-	Check valve - 30 Nm	-	D
57	-	Hexagon head screw - 180 Nm	-	E
61	-	Nut - 200 Nm	-	

Comments for Page: Tightening torque

LOCTITE is a regisrered trademark of Henkel Corporation. 243 is a trademark of Henkel Corporation. Molycote is a registrered trademark of Dow Corning Corporation.

(L)OCAL REMARKS

A | LOCTITE® 243™

B | LOCTITE® 243™

C | Molycote®

D | LOCTITE® 243™

E | Molycote®

ACDE Nederland B.V.

Working tools Working tools SB 152

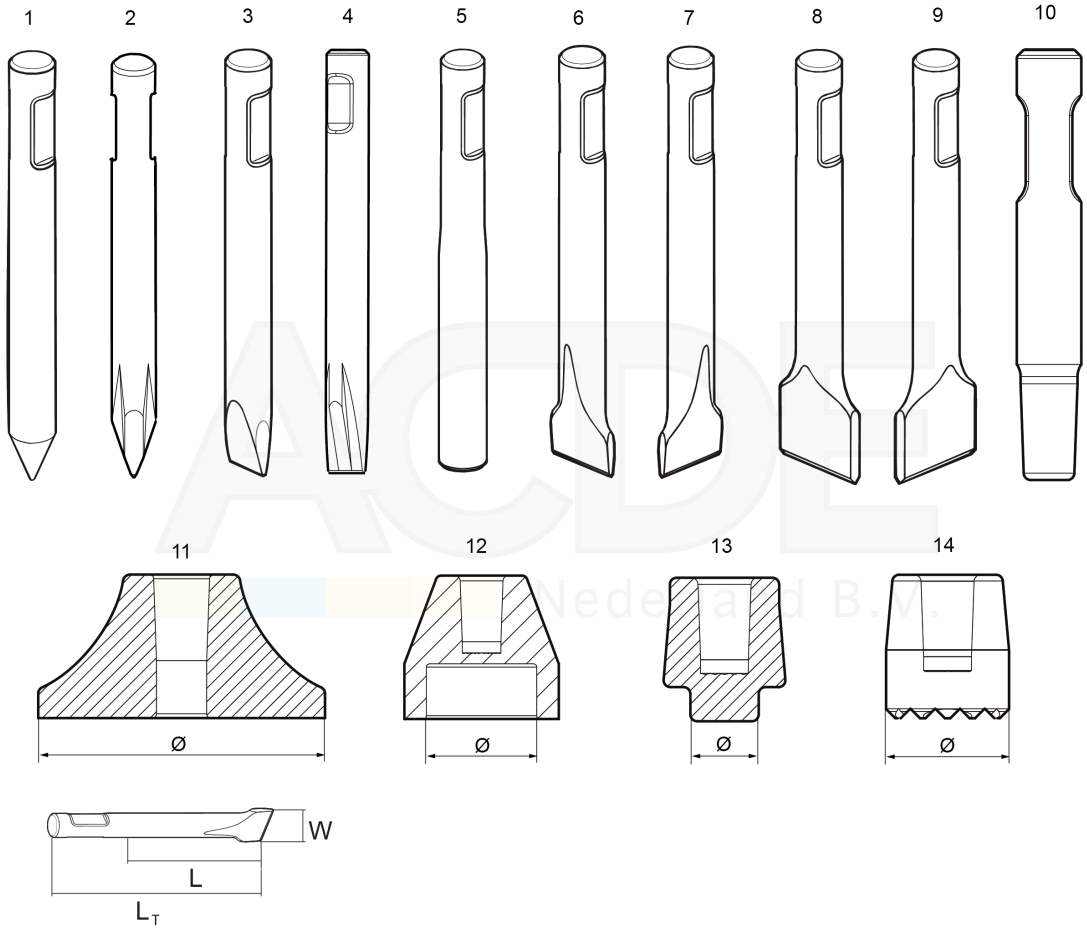

Item	Part No.	Name	Qty	L
1	3083316900	Moil point	1	A
1	3083316901	Moil point	1	B
2	3363098250	Moil point (X-profile)	1	C
3	3083317000	Chisel (cross)	1	D
3	3083340934	Chisel (cross)	1	E
4	3363098251	Chisel (X-profile)	1	F
5	3083318200	Blunt tool	1	G
6	3083317100	Wide chisel (cross)	1	H
7	3083317200	Wide chisel (parallel)	1	I
8	3083317300	Asphalt cutter (cross)	1	J
9	3083317400	Asphalt cutter (parallel)	1	K
10	3315370100	Shaft	1	L
11	3315370600	Tamping pad (square)	1	M
12	3315371400	Post driver pad (round)	1	N
13	3315372100	Pile driver pad (round)	1	O
14	3315372800	Bushing pad (round)	1	P

Comments for Page: Working tools SB 152

(L)OCAL REMARKS

A | L=250 mm, LT=510 mm, Wt=6,7 kg
L=9.84 inch, LT=20.08 inch, Wt=14.8 lb

B | L=490 mm, LT=750 mm, Wt=10,0 kg
L=19.29 inch, LT=29.53 inch, Wt=22.0 lb

C | L=250 mm, LT=510 mm, Wt=6,6 kg
L=9.84 inch, LT=20.08 inch, Wt=14.8 lb

D | W=50 mm, L=250 mm, LT=510 mm, Wt=6,9kg
W=1.97 inch, L=9.84 inch, LT=20.08 inch, Wt=15.2 lb

E | W=50 mm, L=490 mm, LT=750 mm, Wt=10,0 kg
W=1.97 inch, L=19.29 inch, LT=29.53 inch, Wt=22.0 lb

F | W= 50 mm, L=250 mm, LT=510 mm, Wt=6,7 kg
W=1.97 inch, L=9.84 inch, LT=20.08 inch, Wt=14.8 lb

G | W= 50 mm, L=250 mm, LT=510 mm, Wt=9,3 kg

L=9.84 inch, LT=20.08 inch, Wt=20.05 lb

H | W= 110 mm, L=220 mm, LT=480 mm, Wt=7,2 kg
W=4.33 inch, L=8.66 inch, LT=18.90 inch, Wt=15.9 lb

I | W= 110 mm, L=220 mm, LT=480 mm, Wt=7,2 kg
W=4.33 inch, L=8.66 inch, LT=18.90 inch, Wt=15.9 lb

J | W= 120 mm, L=230 mm, LT=490 mm, Wt=6,4 kg
W=4.72 inch, L=9.06 inch, LT=19.26 inch, Wt=14.1 lb

K | W= 120 mm, L=230 mm, LT=490 mm, Wt=6,4 kg
W=4.72 inch, L=9.06 inch, LT=19.26 inch, Wt=14.1 lb

L | Lt=510 mm, Wt=6,8 kg
LT=20.08 inch, Wt=15.0 lb

M | W=Ø200 mm, Wt=15 kg
LT=Ø7.87 inch, Wt=33.1 lb

N | W= Ø100 mm, Wt=8,5 kg
LT=Ø3.94 inch, Wt=18.7 lb

O | W= Ø50 mm, Wt=3,3 kg
LT=Ø1.97 inch, Wt=7.3 lb

P | W= Ø90 mm, Wt=4,1 kg
LT=Ø3.54 inch, Wt=9.0 lb

ACDE Nederland B.V.

Accessories Optional equipment

This page intentionally left blank

ACDE Nederland B.V.

NO EXPLODED VIEW
AVAILABLE
FOR THIS BOM

ACDE Nederland B.V.

Item	Part No.	Name	Qty	L
-	0909107100	Grease gun	1	A
-	3363094913	Chisel paste cartridge, 400 g x 12 pcs, 0.88 lb x 12	1	
-	3315383190	ContiLube II micro	1	
-	3315386780	Welding kit, universal	1	B
-	3315386280	Hose kit, universal	1	C
-	3363106447	Chisel paste cartridge, 150 g x 12, 0.33 lb x 12	1	
-	3363094669	Filling device	1	D
-	3315383980	Filling adapter	1	E
-	3363066411	Filling device	1	F
-	3362263900	Chisel paste container	1	G
-	3362263275	Chisel paste container	1	H
-	3360920415	Filling device for accumulator	1	
-	3363094459	Nipple, for charging the accumulator	1	
-	3361329803	Filling hose, for charging the accumulator	1	
-	3315353100	Bushing wear controller	1	

Comments for Page: Optional equipment

(L)OCAL REMARKS

A | For manual greasing with cartridge, 400 g (0.88 lb)

B | For ContiLube™ II micro

C | For ContiLube™ II micro

D | For the 150 g (0.33 lb) Chisel paste cartridges, to use in combination with Chisel paste container 15 kg (33 lb)

E | For the 150 g (0.33 lb)

Chisel paste cartridges, suitable with the filling device for 15 kg (33 lb) and 45 kg (99 lb)

F | For the 150 g (0.33 lb) Chisel paste cartridges, to use in combination with Chisel paste container 45 kg (99 lb)

G | 15 kg (33 lb)

H | 45 kg (99 lb)

ACDE Nederland B.V.

Accessories Hydraulic hoses

NO EXPLODED VIEW
AVAILABLE
FOR THIS BOM

ACE Nederland B.V.

Item	Part No.	Name	Qty	L
-	3360995717	Hose, both ends 18 L(M26 x 1.5) length 1500 mm	2	
-	3362235159	Hose, both ends 18 L(M26 x 1.5) length 2000 mm	2	
-	3363083313	Hose, both ends 18 L(M26 x 1.5) length 2400 mm	2	
-	3363098018	Additional fitting kit	1	A

Comments for Page: Hydraulic hoses

(L)OCAL REMARKS

A | Needed to fit two hoses to the hydraulic breaker

ACDE Nederland B.V.

Kits Label kit

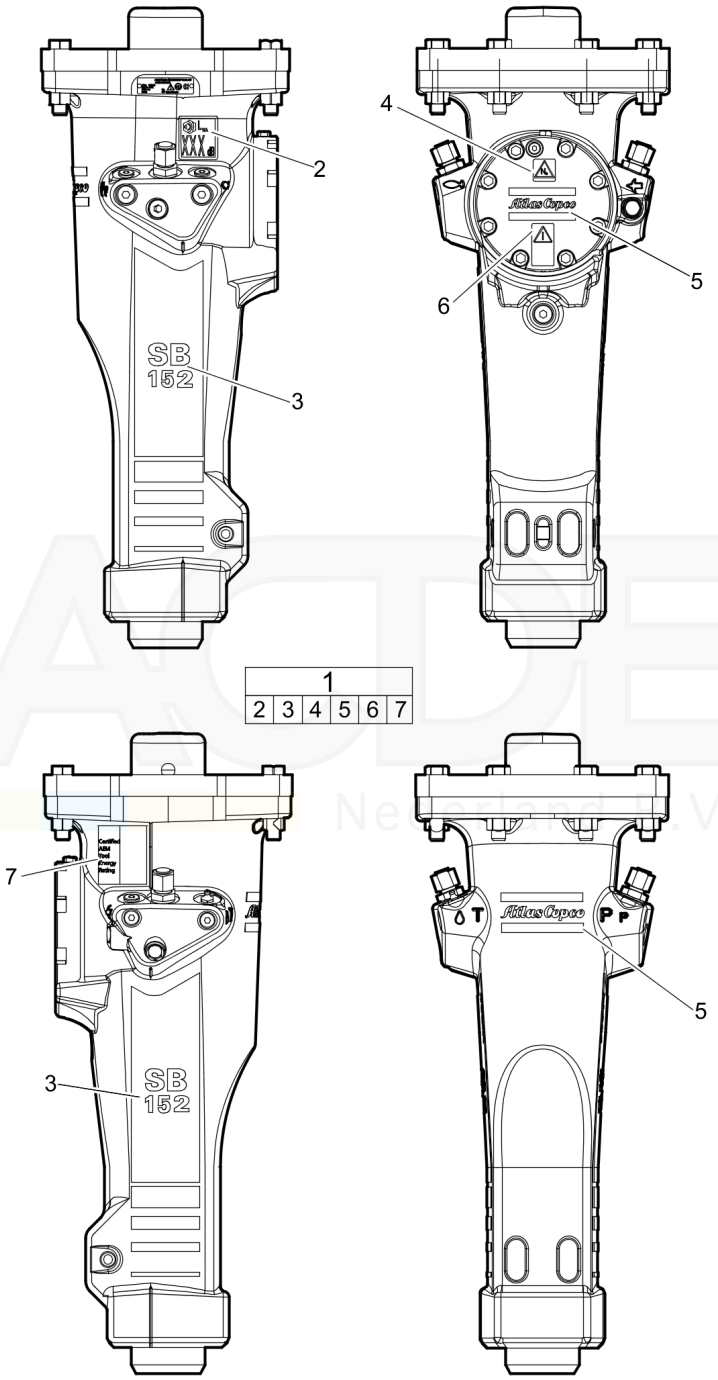

Item	Part No.	Name	Qty	L
1	3315290591	Label kit	1	
.2	--	Sound power label	1	
.3	--	Product label	2	A
.4	--	Safety label	1	
.5	--	Product label	2	B
.5	--	Product label	2	B
.6	--	Safety label	1	
.6	--	Safety label	1	
.7	--	AEM sign	1	
5	--	Product label	2	B
6	--	Safety label	1	

Comments for Page: Label kit

(L)OCAL REMARKS

A | "SB 152"

B | "Atlas Copco"

(L)OCAL REMARKS

A | "SB 152"

B | "Atlas Copco"

(L)OCAL REMARKS

A | "SB 152"

B | "Atlas Copco"

ACDE Nederland B.V.

Kits Seal kit

NO EXPLODED VIEW
AVAILABLE
FOR THIS BOM

ACE Nederland B.V.

Item	Part No.	Name	Qty	L
1	3315290590	Seal kit	1	
.-	3315356400	Scraper ring	1	
.-	0663210289	O-ring, 64.5 x 3 mm (90 shore), 2.53 x 0.12 in.	4	
.-	0661100024	Washer	1	
.-	3115329002	Seal ring 8 x 14 x 2.4 mm (90 shore), 0.31 x 0.55 x 0.09 in.	1	
.-	0663212000	O-ring 13.3 x 2.4 mm (70 shore), 0.52 x 0.09 in.	1	
.-	0663211400	O-ring 7.3 x 2.4 mm (90 shore), 0.28 x 0.09 in.	1	
.-	0664000003	Seal ring	2	
.-	0663905501	O-ring, 12.42 x 1.78 mm0.49 x 0.07 in. (90 shore)	2	
.-	0663211424	O-ring, 31.2 x 3 mm , 1.23 x 0.12 in. (90 shore)	1	
.-	0665090014	Seal, SCR 10 x 16 x 2.4 mm	2	
.-	0663903201	O-ring, 15.6 x 1.78 mm , 0.61 x 0.07 in. (90 shore)	2	
.-	0663905401	O-ring, 10.82 x 1.78 mm , 0.43 x 0.07 in. (90 shore)	2	
.-	0665909954	Wiper	1	
.-	0665070131	Piston rod seal	1	
.-	0663210053	O-ring, 84.5 x 3 mm (90 shore), 3.33 x 0.12 in.	4	
.-	0665070132	Piston rod seal	1	
.-	0663211456	O-ring, 86 x 3 mm (90 shore), 3.39 x 0.12 in.	5	
.-	3315280800	Valve rubber	1	
.-	0663211490	O-ring, 31. 2 x 3 mm, 1.23 x 0.12 in.	2	
.-	0663210631	O-ring, 88.62 x 1.78 mm (90 shore), 3.49 x 0.07 in.	1	
.-	3315305000	Plug	1	

ACDE Nederland B.V.

Kits Lower hammer part kit

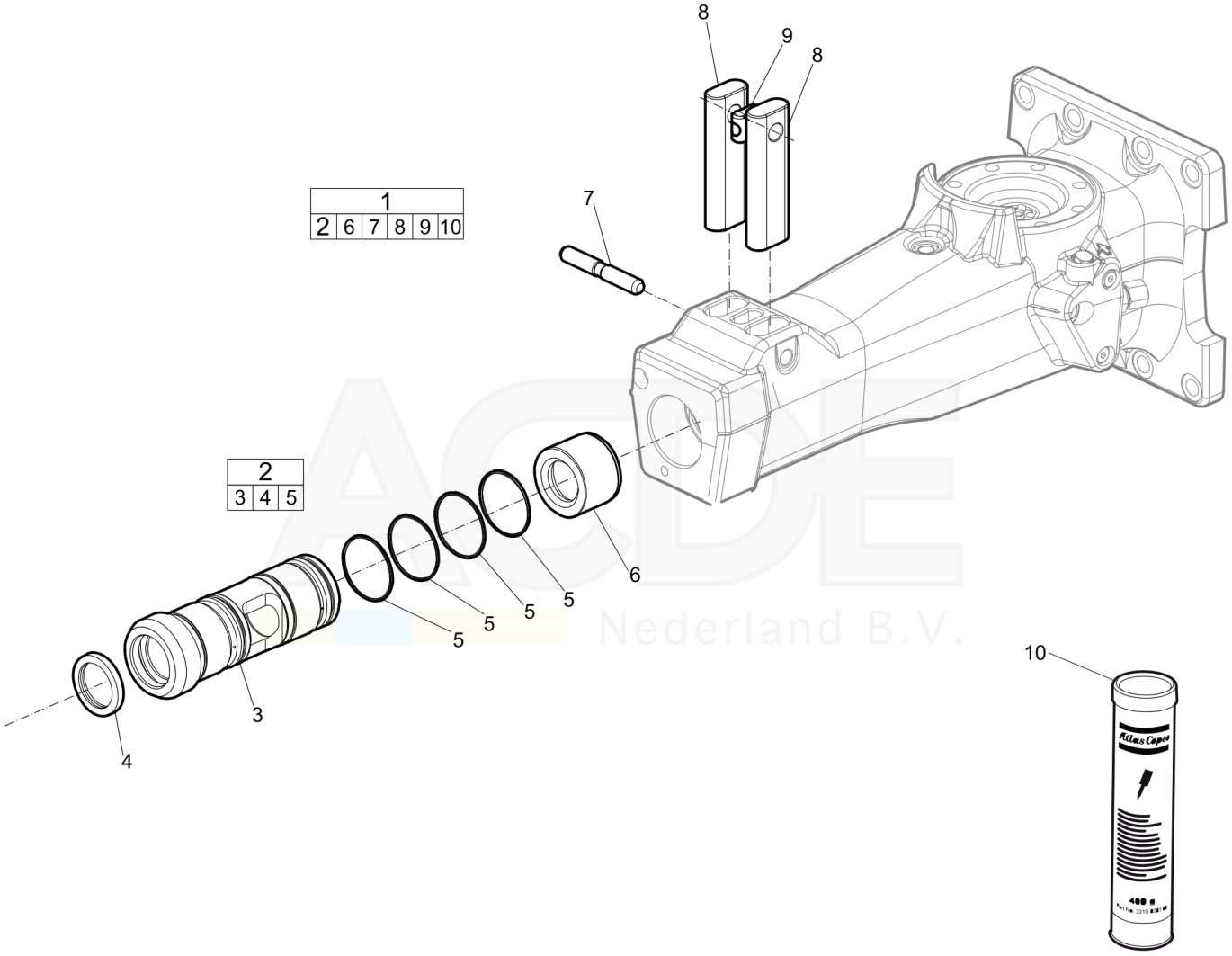

Item	Part No.	Name	Qty	L
1	3315352140	Lower hammer part kit	1	
.2	3315291680	Bushing, complete	1	
..3	---	Bushing	1	
..4	3315296300	Scraper ring	1	
..5	0663210289	O-ring, 64.5 x 3 mm (90 shore), 2.53 x 0.12 in.	4	
.6	3315291800	Stop ring	1	
.7	3315293000	Lock pin	1	
.8	3315147000	Tool retainer	2	
.9	3315141900	Lock buffer	1	
.10	--	Chisel paste cartridge	1	A

Comments for Page: Lower hammer part kit

(L)OCAL REMARKS

A | 400 g

ACDE Nederland B.V.

Kits Accumulator repair kit

NO EXPLODED VIEW
AVAILABLE
FOR THIS BOM

ACE Nederland B.V.

Item	Part No.	Name	Qty	L
1	3315282490	Accumulator repair kit	1	
.-	3315293300	Coil spring	1	
.-	3315288900	Diaphragm support	1	
.-	3315289000	Diaphragm	1	
.-	0211196534	Hexagon socket screw, Screw with extra high fatigue strength.	8	A
.-	0686371805	Plug VSTI R 1⁄8-ED	1	B
.-	3115329002	Seal ring 8 x 14 x 2.4 mm (90 shore), 0.31 x 0.55 x 0.09 in.	1	
.-	0663212000	O-ring 13.3 x 2.4 mm (70 shore), 0.52 x 0.09 in.	1	
.-	3315366000	Charge valve	1	
.-	0663211400	O-ring 7.3 x 2.4 mm (90 shore), 0.28 x 0.09 in.	1	
.-	0101414000	Parallel pin D4 x 25 mm, D4 x 0.98 in.	1	

Comments for Page: Accumulator repair kit

(L)OCAL REMARKS

A | Screw with extra high fatigue strength.

B | VSTI R 1/8-ED

ACDE Nederland B.V.

Dimensions Dimensions (mm)

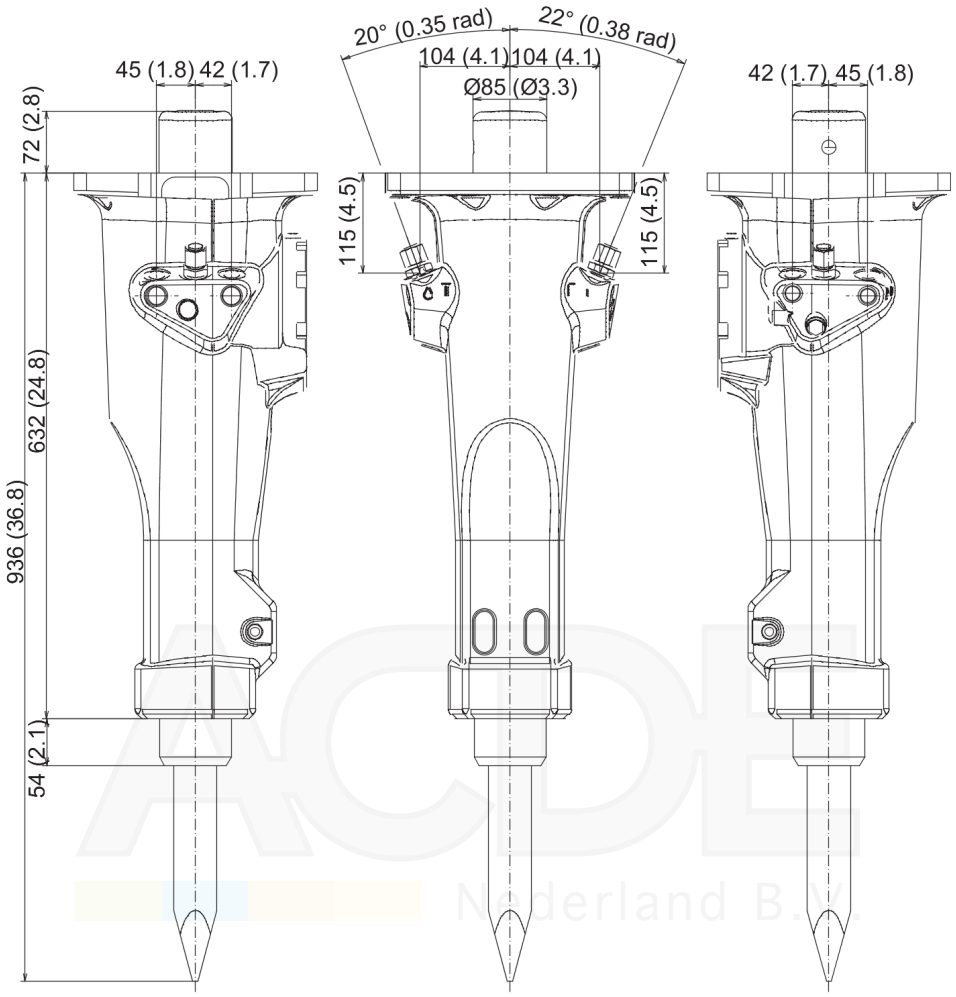

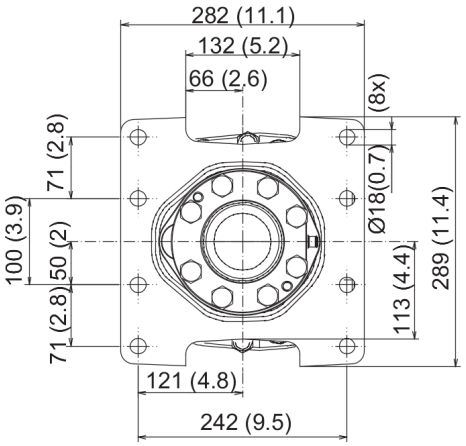

ACDE
Nederland B.V.

ACDE
Nederland B.V.

Any unauthorized use or copying of the contents or any part thereof is prohibited. This applies in particular to trademarks, model denominations, part numbers, and drawings.