SB 452

Spare parts list

Hydraulic breaker

SB 452 from s/n BES043603

© 2015 Construction Tools PC AB | No. 9800088701 | 2015-05

General information

This spare parts list applies to the following:

Part number	Description
8460030070	SB 452

Use only authorized parts. Any damage or malfunction caused by the use of unauthorized parts is not covered by Warranty or Product Liability.
Any unauthorized use or copying of the contents or any part thereof is prohibited. This applies in particular to trademarks, model denominations, part numbers, and drawings.

Instructions for use
This spare parts list contains no safety regulations and is merely intended to assist in the ordering of spare parts.
For information about operating, servicing, or repairing, the relevant Safety and operating instructions must be consulted at all costs.
Please observe the safety instructions listed in the relevant Safety and operating instructions!

ACDE
Nederland B.V.

Contents

Spare parts list
Spare part list 1
Optional parts - Bushing oversize, complete 5
Optional parts - Restrictor, complete 7

Tightening torque
Tightening torque 9

Working tools
Working tools SB 452 11

Accessories
Optional equipment 14
Hydraulic hoses 17

Kits
Label kit 19
Seal kit 21
Lower hammer part kit 23
Accumulator repair kit 25

Dimensions
Dimensions (mm) 27

ACDE
Nederland B.V.

Spare parts list Spare part list

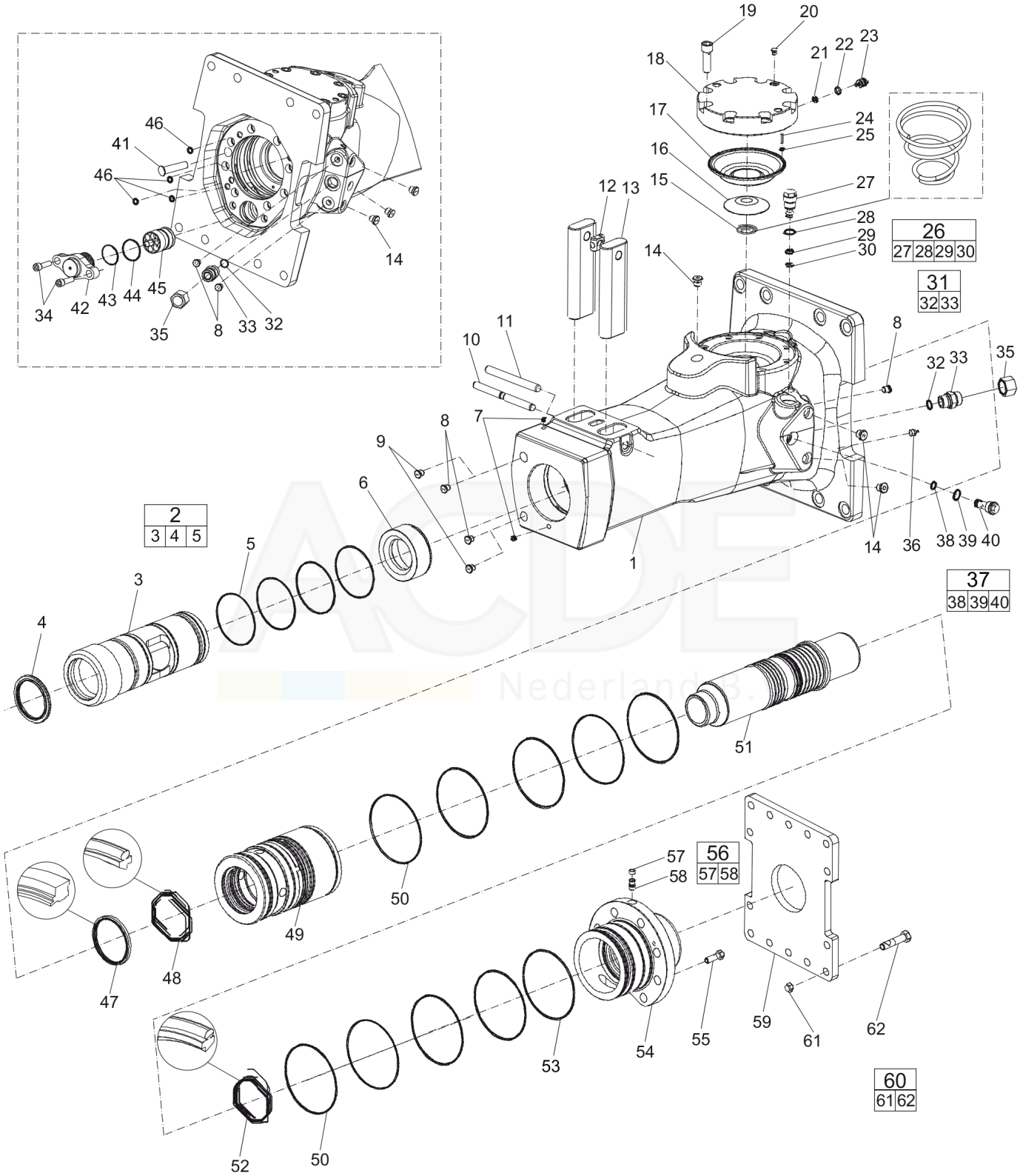

Item	Part No.	Name	Qty	L
1	-	Breaker body	1	
2	3315312480	Bushing standard, complete	1	A
.3	-	Bushing, Ø129 mm, Ø5.08 in.	1	
.4	3315353600	Scraper ring	1	
.5	0663714700	O-ring	4	
6	3315312300	Stop ring	1	
7	-	Plug	2	
8	0686644207	Plug, VSTI R 1/4-ED	5	B
9	3315395200	Water nozzle	2	
10	3315155800	Lock pin	1	
11	0108169129	Spring pin, option, 16 x 180 mm, 0.63 x 7.09 in.	1	
12	3315141900	Lock buffer	1	
13	3315155700	Tool retainer	2	
14	0686371801	Plug, VSTI R 3⁄8 - ED	6	C
15	3315303500	Coil spring	1	
16	3315303201	Diaphragm support	1	
17	3315416300	Diaphragm	1	
18	3315303100	Diaphragm cover	1	
19	0211196544	Hexagon socket screw M16 x 50 mm Screw with extra high fatigue strength.	8	D
20	0686371805	Plug VSTI R 1⁄8-ED	1	E
21	3115329002	Seal ring 8 x 14 x 2.4 mm (90 shore), 0.31 x 0.55 x 0.09 in.	1	
22	0663212000	O-ring 13.3 x 2.4 mm (70 shore), 0.52 x 0.09 in.	1	
23	3315366000	Charge valve	1	
24	0101414000	Parallel pin D4 x 25 mm, D4 x 0.98 in.	1	
25	0663211400	O-ring 7.3 x 2.4 mm (90 shore), 0.28 x 0.09 in.	1	
26	3315365800	Pressure relief valve, complete	1	
27	-	Pressure relief valve	1	
28	9125621100	O-ring, 20.35 x 1.78 mm , 0.80 x 0.07 in. (90 shore)	1	
29	0663210421	O-ring, 14.0 x 1.78 mm , 0.55 x 0.07 in. (90 shore)	1	
30	0661200401	Back-up ring	1	
31	0580001845	Nipple, complete	1	F
.32	0664000004	Seal ring	1	
33	-	Nipple	1	
34	0211110467	Screw, M20 x 75 mm	2	
35	3361353486	Cap(Valid from s/n BES043603)	2	
36	0544215300	Grease nipple, ISO 7-R 1⁄4	1	
37	3315369653	Restrictor standard, complete	1	G

ACDE Nederland B.V.

This page intentionally left blank

ACDE Nederland B.V.

Item	Part No.	Name	Qty	L
.38	0663210421	O-ring, 14.0 x 1.78 mm , 0.55 x 0.07 in. (90 shore)	1	
.39	9125621100	O-ring, 20.35 x 1.78 mm , 0.80 x 0.07 in. (90 shore)	1	
.40	-	Restrictor, standard, Ø7.5 mm, Ø0.30 in.	1	
41	3315336700	Plug	1	
42	3315362820	Valve cover	1	
43	0663211491	O-ring, 47.29 x 2.62 mm Polyuretan, 1.86 x 0.10 in.	1	
44	0663990026	Seal ring, 51.3 x 54.3 x 3 mm, 2.02 x 2.14 x 0.12 in.	1	
45	3315312100	Control valve	1	
46	0665090014	Seal, SCR 10 x 16 x 2.4 mm	4	
47	0665909964	Wiper	1	
48	0665070147	Piston rod seal	1	
49	3315312000	Liner	1	
50	0663990032	Seal ring	9	
51	3315311900	Piston	1	
52	0665070148	Piston rod seal	1	
53	0663210417	O-ring, 145.72 x 2.62 mm , 5.7 x 0.10 in. (70 shore)	1	
54	3315312600	Back head	1	
55	0147155503	Hexagon head screw	8	
56	3315244881	Check valve, complete	1	
.57	3315280800	Valve rubber	1	
58	-	Check valve	1	
59	3315307700	Base plate	1	
60	3315323890	Set of eight screws, complete	1	
.61	-	Nut, M20	8	
.62	-	Screw, M20 x 90 mm	8	

Comments for Page: Spare part list

(L)OCAL REMARKS

A | For oversize bushings, see section "Bushing oversize, complete".

B | VSTI G 1/4 - ED

C | VSTI G 3/8- ED

D | Screw with extra high fatigue strength.

E | VSTI R 1/8- ED

F | There are two "Nipple, complete" on the machine.

G | For more restrictors, see section "Restrictors, complete".

Spare parts list Optional parts - Bushing oversize, complete

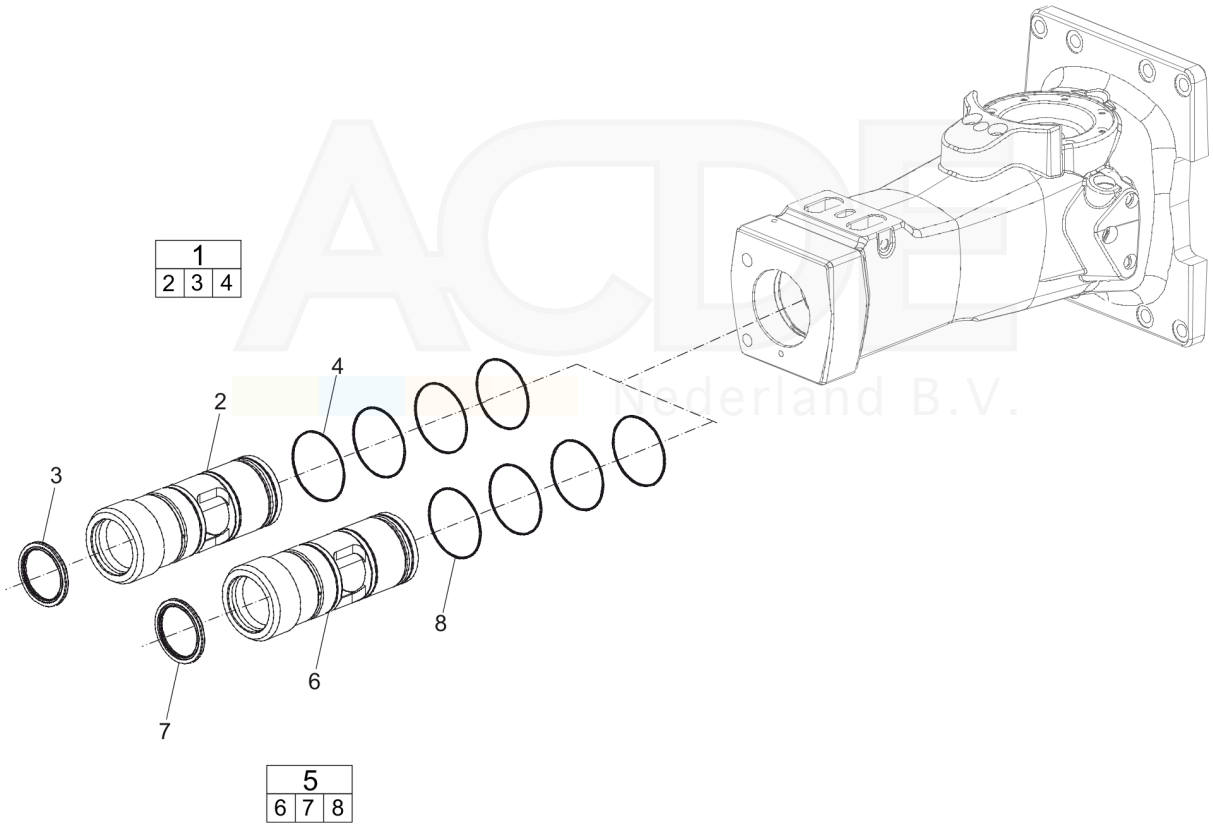

Item	Part No.	Name	Qty	L
1	3315312460	Bushing oversize, complete	1	
.2	--	Bushing, Ø130.5 mm, Ø5.14 in.	1	
.3	3315353600	Scraper ring	1	
.4	0663210823	O-ring, 119.5 x 3 mm, 4.70 x 0.12 in.	4	
5	3315312463	Bushing oversize, complete	1	
.6	--	Bushing, Ø132 mm, Ø5.20 in.	1	
.7	3315353600	Scraper ring	1	
.8	0663210823	O-ring, 119.5 x 3 mm, 4.70 x 0.12 in.	4	

ACDE Nederland B.V.

Spare parts list Optional parts - Restrictor, complete

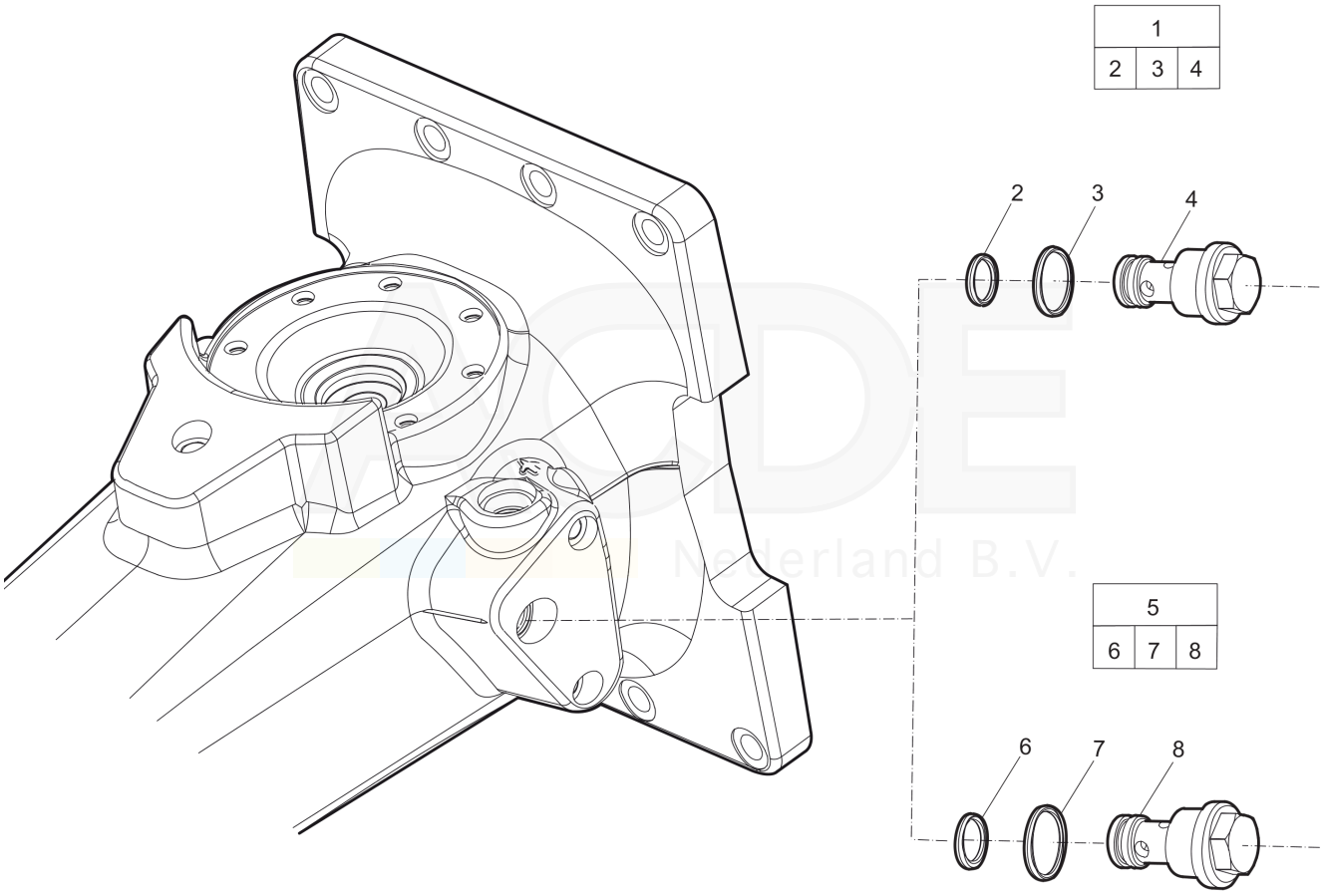

Item	Part No.	Name	Qty	L
1	3315369635	Restrictor, complete	1	
.2	0663210421	O-ring, 14.0 x 1.78 mm , 0.55 x 0.07 in. (90 shore)	1	
.3	9125621100	O-ring, 20.35 x 1.78 mm , 0.80 x 0.07 in. (90 shore)	1	
.4	3315315235	Restrictor	1	
5	3315369645	Restrictor, complete	1	
.6	0663210421	O-ring, 14.0 x 1.78 mm , 0.55 x 0.07 in. (90 shore)	1	
.7	9125621100	O-ring, 20.35 x 1.78 mm , 0.80 x 0.07 in. (90 shore)	1	
.8	3315315245	Restrictor	1	

ACDE Nederland B.V.

Tightening torque Tightening torque

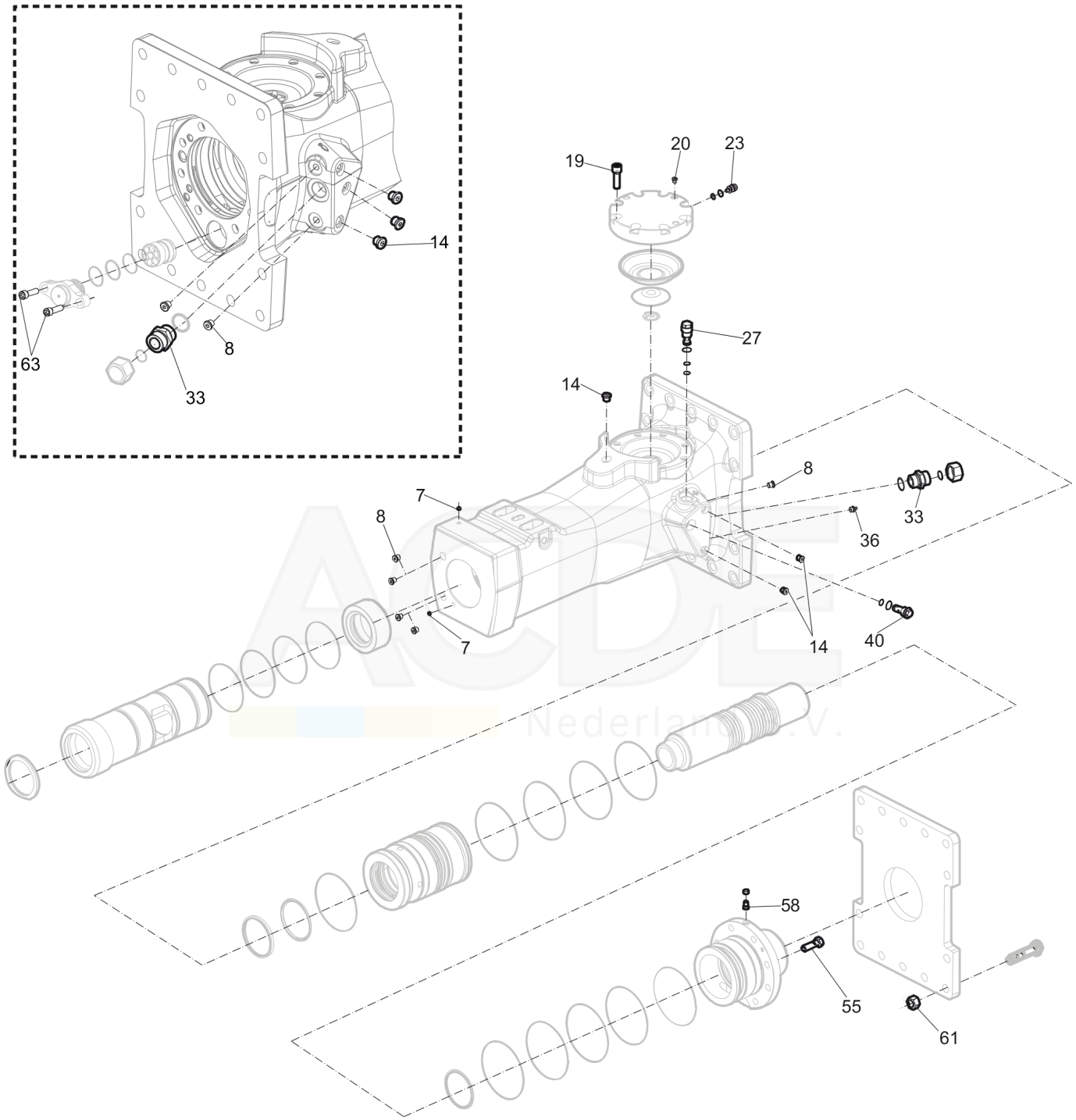

Item	Part No.	Name	Qty	L
8	-	Plug - 30 Nm, use LOCTITE® 243™	-	
14	-	Plug - 80 Nm, use LOCTITE® 243™	-	
19	-	Hexagon socket screw - 300 Nm, use Molykote®	-	
20	-	Plug - 20 Nm	-	
23	-	Charge valve - 27 Nm	-	
27	-	Pressure relief valve - 80 Nm	-	
33	-	Nipple - 210 Nm	-	
36	-	Grease nipple - 30 Nm	-	
40	-	Restrictor standard - 80 Nm	-	
55	-	Hexagon head screw - 315 Nm, use Molykote®	-	
58	-	Check valve - 30 Nm, use LOCTITE® 243™	-	
61	-	Nut - 400 Nm, use Molykote®	-	
63	-	Screw-615 Nm, use Molykote®	-	

ACDE Nederland B.V.

Working tools Working tools SB 452

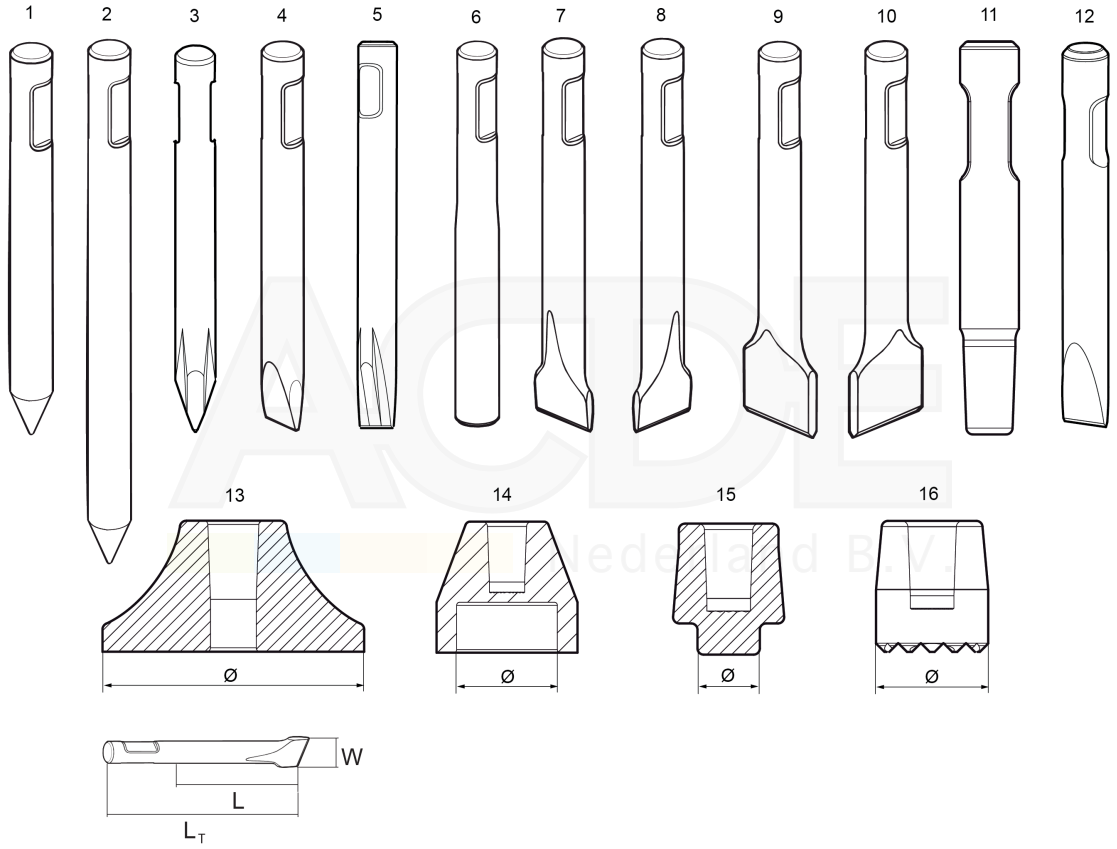

Item	Part No.	Name	Qty	L
1	3083317700	Moil point	1	A
2	3083317714	Moil point	1	B
3	3363098256	Moil point (X-profile)	1	C
4	3083317800	Chisel (cross)	1	D
5	3363098257	Chisel (X-profile)	1	E
6	3083318800	Blunt tool	1	F
7	3083317900	Wide chisel (cross)	1	G
8	3083340936	Wide chisel (parallel)	1	H
9	3083319801	Asphalt cutter (cross)	1	I
10	3083319800	Asphalt cutter (parallel)	1	J
11	3315370400	Shaft	1	K
12	3083342406	Narrow chisel	1	L
13	3315371200	Tamping pad (square)	1	M
14	3315372000	Post driver pad (round)	1	N
15	3315372600	Pile driver pad (round)	1	O
16	3315373200	Bushing pad (round)	1	P

Comments for Page: Working tools SB 452

(L)OCAL REMARKS

A | L=465 mm, LT=840 mm, Wt=40 kg
L=18.3 inch, LT=33.1 inch, Wt=88 lb

B | L=1025 mm, LT=1400 mm, Wt=67 kg
L=40.3 inch, LT=55.1 inch, Wt=148lb

C | L=465 mm, LT=840 mm, Wt=39 kg
L=18.3 inch, LT=33.1 inch, Wt=86 lb

D | W=95 mm, L=465 mm, LT=840 mm, Wt=43 kg
W=3.7 inch, L=18.3 inch, LT=33.1 inch, Wt=95 lb

E | W=95 mm, L=465 mm, LT=840 mm, Wt=40 kg
W=3.7 inch, L=18.3 inch, LT=33.1 inch, Wt=88 lb

F | L=465 mm, LT=840 mm, Wt=40 kg
L=18.3 inch, LT=33.1 inch, Wt=88 lb

G | W=180 mm, L=425 mm, LT=800 mm, Wt=40 kg

ACDE Nederland B.V.

W=7 inch, L=16.7 inch, LT=31.5 inch, Wt=88 lb

H | W=180 mm, L=425 mm, LT=800 mm, Wt=40 kg
W=7 inch, L=16.7 inch, LT=31.5 inch, Wt=88 lb

I | W=200 mm, L=435 mm, LT=850 mm, Wt=39 kg
W=7.9 inch, L=17.1 inch, LT=33.5 inch, Wt=86 lb

J | W=200 mm, L= 435 mm, LT=850 mm, Wt=39 kg
W=7.9 inch, L=17.1 inch, LT=33.5 inch, Wt=86 lb

K | LT= 700 mm, Wt= 37 kg
LT=27.6 inch, Wt=82 lb

L | W= 95 mm, L=300 mm, LT= 680 mm, Wt=33 kg
W=3.7 inch, L=11.8 inch, LT=26.8 inch, Wt=73 lb

M | W= Ø400 mm, Wt=80 kg
W= Ø15.7 inch, Wt=176 lb

N | W=Ø200 mm, Wt=33 kg
W= Ø7.9 inch, Wt=73 lb

O | W=Ø150 mm, Wt=26 kg
W= Ø5.9 inch, Wt=57 lb

P | W=Ø190 mm, Wt=30 kg
W= Ø7.5 inch, Wt=66 lb

ACDE Nederland B.V.

Accessories Optional equipment

This page intentionally left blank

ACDE Nederland B.V.

NO EXPLODED VIEW
AVAILABLE
FOR THIS BOM

ACDE Nederland B.V.

Item	Part No.	Name	Qty	L
-	0909107100	Grease gun	1	A
-	3363094913	Chisel paste cartridge, 400 g x 12 pcs, 0.88 lb x 12	1	
-	3315383190	ContiLube II micro	1	
-	3315386780	Welding kit, universal	1	B
-	3315386280	Hose kit, universal	1	C
-	3363106447	Chisel paste cartridge, 150 g x 12, 0.33 lb x 12	1	
-	3363094669	Filling device	1	D
-	3315383980	Filling adapter	1	E
-	3363066411	Filling device	1	F
-	3362263900	Chisel paste container	1	G
-	3362263275	Chisel paste container	1	H
-	3360920415	Filling device for accumulator	1	
-	3363094459	Nipple, for charging the accumulator	1	
-	3361329803	Filling hose, for charging the accumulator	1	
-	3315353100	Bushing wear controller	1	

Comments for Page: Optional equipment

(L)OCAL REMARKS

A | For manual greasing with cartridge, 400 g (0.88 lb)

B | For ContiLube™ II micro

C | For ContiLube™ II micro

D | For the 150 g (0.33 lb) Chisel paste cartridges, to use in combination with Chisel paste container 15 kg (33 lb)

E | For the 150 g (0.33 lb)

Chisel paste cartridges, suitable with the filling device for 15 kg (33 lb) and 45 kg (99 lb)

F | For the 150 g (0.33 lb) Chisel paste cartridges, to use in combination with Chisel paste container 45 kg (99 lb)

G | 15 kg (33 lb)

H | 45 kg (99 lb)

ACDE Nederland B.V.

Accessories Hydraulic hoses

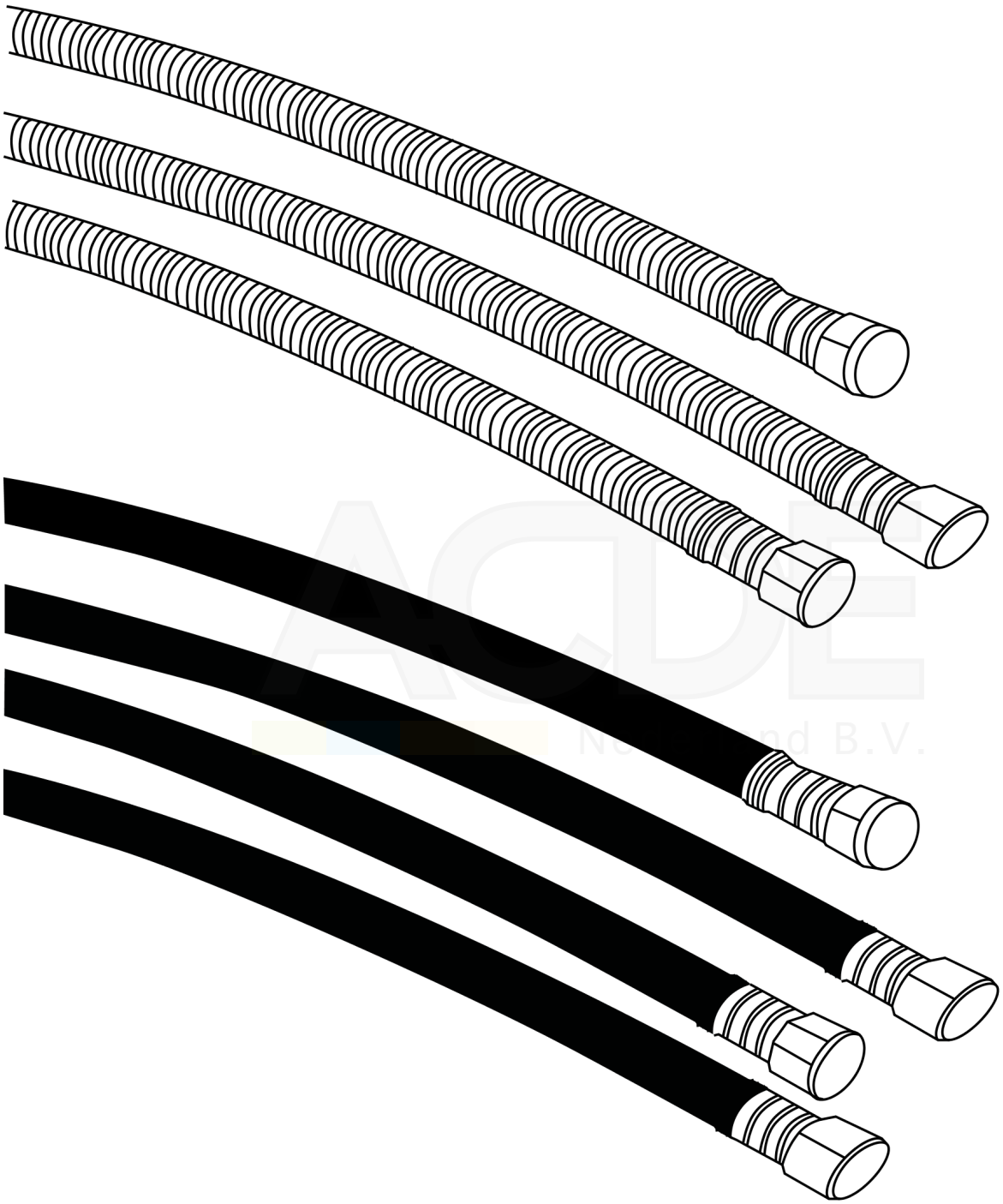

Item	Part No.	Name	Qty	L
Not Shown	-	Heavy duty connection hoses	-	
-	3360995717	Hose, both ends 18 L(M26 x 1.5) length 1500 mm	2	
-	3362235159	Hose, both ends 18 L(M26 x 1.5) length 2000 mm	2	
-	3363083313	Hose, both ends 18 L(M26 x 1.5) length 2400 mm	2	
-	3363115426	Hose, both ends 18 L(M26x1.5) length 1750 mm	2	
Not Shown	-	Standard connection hoses	-	
-	3363491002	Hose, both ends 18 L(M26x1.5) length 1500 mm	2	
-	3363115423	Hose, both ends 18 L(M26x1.5) length 1750 mm	2	
-	3363115424	Hose, both ends 18 L(M26x1.5) length 2000 mm	2	
-	3363115425	Hose, both ends 18 L(M26x1.5) length 2400 mm	2	
-	3363098019	Additional fitting kit(needed to fit two hoses to the hydraulic breaker)	1	

ACDE Nederland B.V.

Kits Label kit

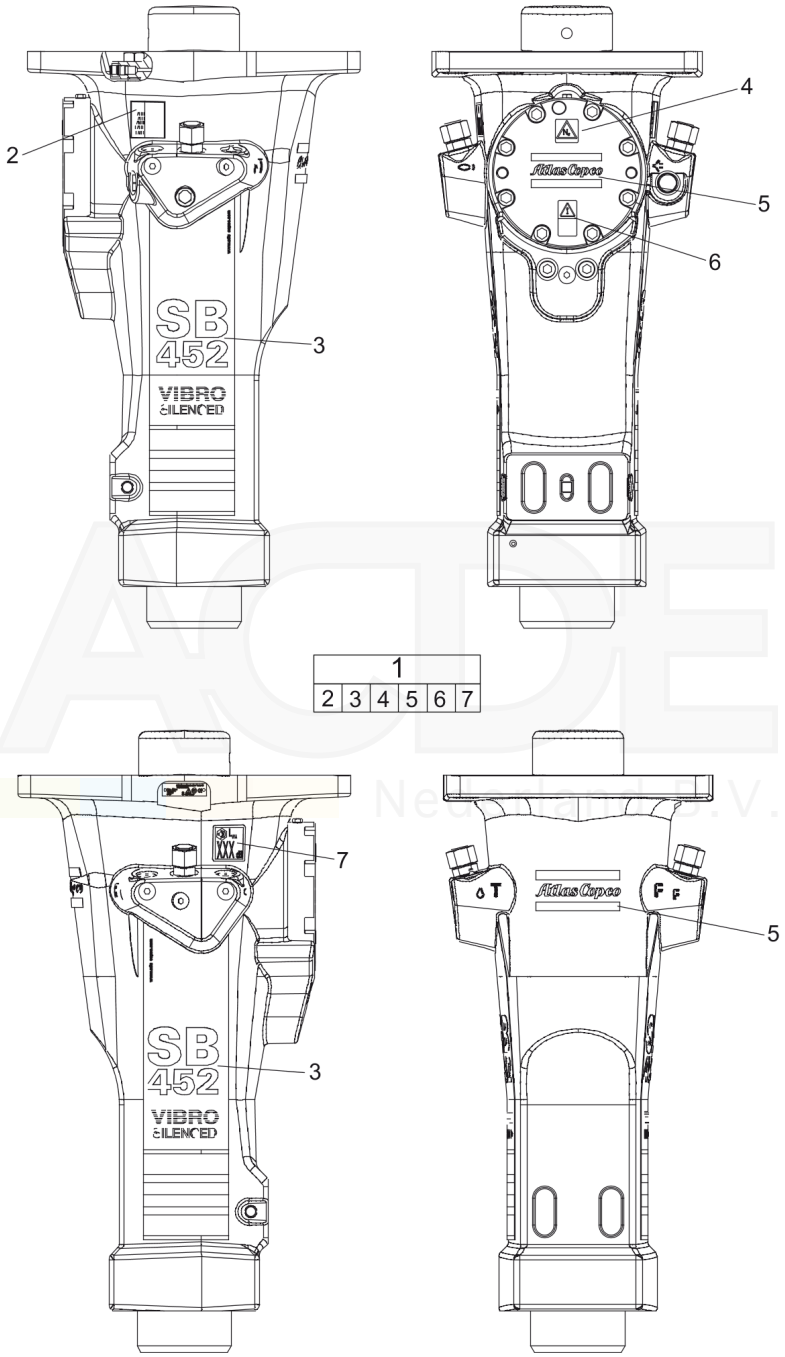

Item	Part No.	Name	Qty	L
1	3315312791	Label kit	1	
.2	--	AEM sign	1	
.3	--	Product label "SB 452"	2	
.4	--	Safety label	1	
.5	--	Product label "Atlas Copco"	2	
.6	--	Safety label	1	
.7	--	Sound power label	1	

ACDE Nederland B.V.

Kits Seal kit

NO EXPLODED VIEW
AVAILABLE
FOR THIS BOM

ACE Nederland B.V.

Item	Part No.	Name	Qty	L
1	3315312790	Seal kit	1	
.5	0663714700	O-ring	4	
.21	3115329002	Seal ring 8 x 14 x 2.4 mm (90 shore), 0.31 x 0.55 x 0.09 in.	1	
.22	0663212000	O-ring 13.3 x 2.4 mm (70 shore), 0.52 x 0.09 in.	1	
.25	0663211400	O-ring 7.3 x 2.4 mm (90 shore), 0.28 x 0.09 in.	1	
.28,38	9125621100	O-ring, 20.35 x 1.78 mm , 0.80 x 0.07 in. (90 shore)	1	
.29,37	0663210421	O-ring, 14.0 x 1.78 mm , 0.55 x 0.07 in. (90 shore)	1	
.30	0661200401	Back-up ring	1	
.32	0664000004	Seal ring	2	
.34	0663210217	O-ring, 18.77 x 1.78 mm, 0.74 x 0.07 in. (90 shore)	2	
.42	3315336700	Plug	1	
.44	0663211491	O-ring, 47.29 x 2.62 mm Polyuretan, 1.86 x 0.10 in.	1	
.45	0663990026	Seal ring, 51.3 x 54.3 x 3 mm, 2.02 x 2.14 x 0.12 in.	2	
.47	0665090014	Seal, SCR 10 x 16 x 2.4 mm	4	
.48	0665909964	Wiper	1	
.49	0665070147	Piston rod seal	1	
.51	0663990032	Seal ring	9	
.53	0665070148	Piston rod seal	1	
.54	0663210417	O-ring, 145.72 x 2.62 mm , 5.7 x 0.10 in. (70 shore)	1	
.58	3315280800	Valve rubber	1	

ACDE Nederland B.V.

Kits Lower hammer part kit

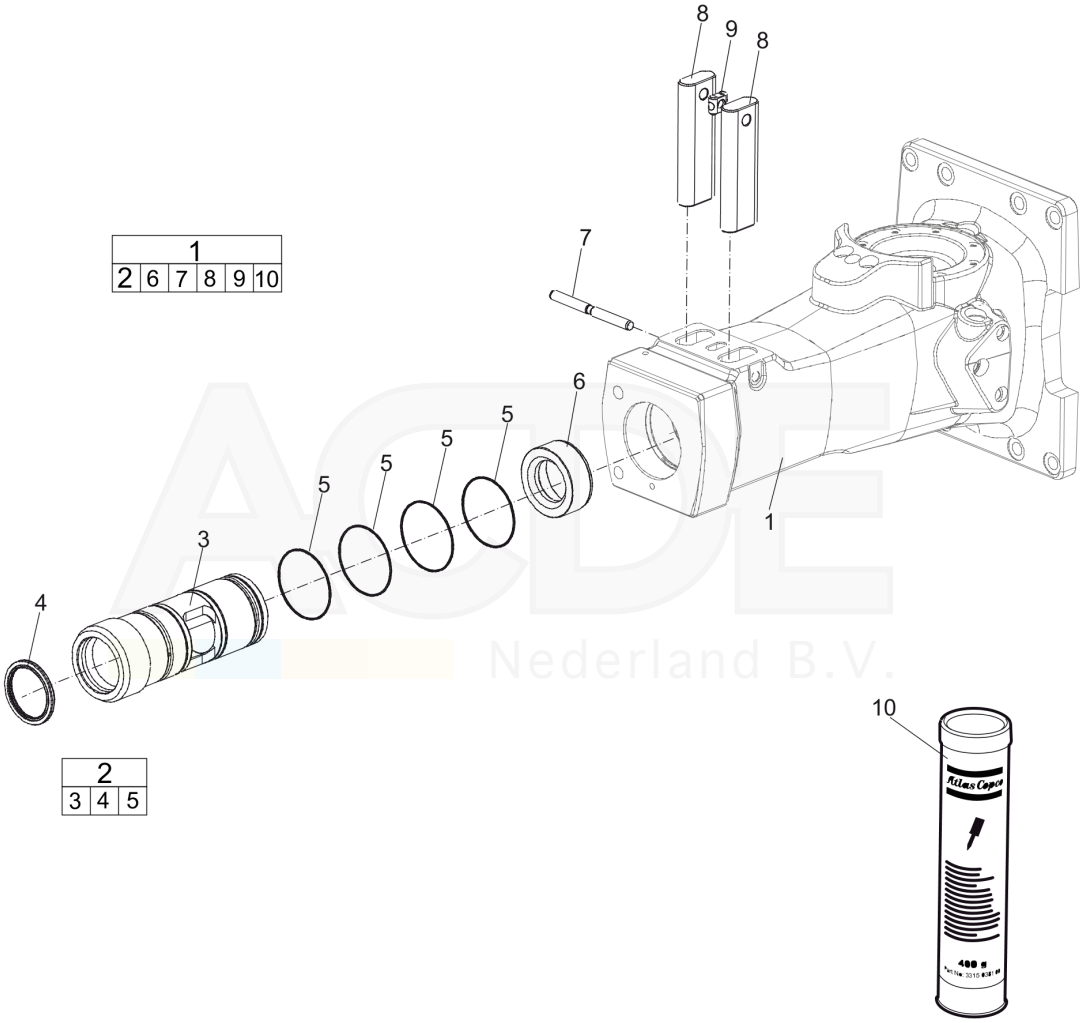

Item	Part No.	Name	Qty	L
1	3315312490	Lower hammer part kit	1	
.2	3315312480	Bushing standard, complete	1	
3	---	Bushing	1	
4	3315353600	Scraper ring	1	
5	0663714700	O-ring	4	
6	3315312300	Stop ring	1	
7	3315155800	Lock pin	1	
8	3315155700	Tool retainer	2	
9	3315141900	Lock buffer	1	
10	--	Chisel paste cartridge, 400 g (0.88 lb)	1	

ACDE Nederland B.V.

Kits Accumulator repair kit

NO EXPLODED VIEW
AVAILABLE
FOR THIS BOM

ACE Nederland B.V.

Item	Part No.	Name	Qty	L
17	3315303190	Accumulator repair kit	1	
.18	3315303500	Coil spring	1	
.19	3315303201	Diaphragm support	1	
.20	3315416300	Diaphragm	1	
.22	0211196544	Hexagon socket screw M16 x 50 mm Screw with extra high fatigue strength.	8	
.23	0686371805	Plug VSTI R 1⁄8-ED	1	
.24	3115329002	Seal ring 8 x 14 x 2.4 mm (90 shore), 0.31 x 0.55 x 0.09 in.	1	
.25	0663212000	O-ring 13.3 x 2.4 mm (70 shore), 0.52 x 0.09 in.	1	
.26	3315366000	Charge valve	1	
.27	0101414000	Parallel pin D4 x 25 mm, D4 x 0.98 in.	1	
.28	0663211400	O-ring 7.3 x 2.4 mm (90 shore), 0.28 x 0.09 in.	1	

ACDE Nederland B.V.

Dimensions Dimensions (mm)

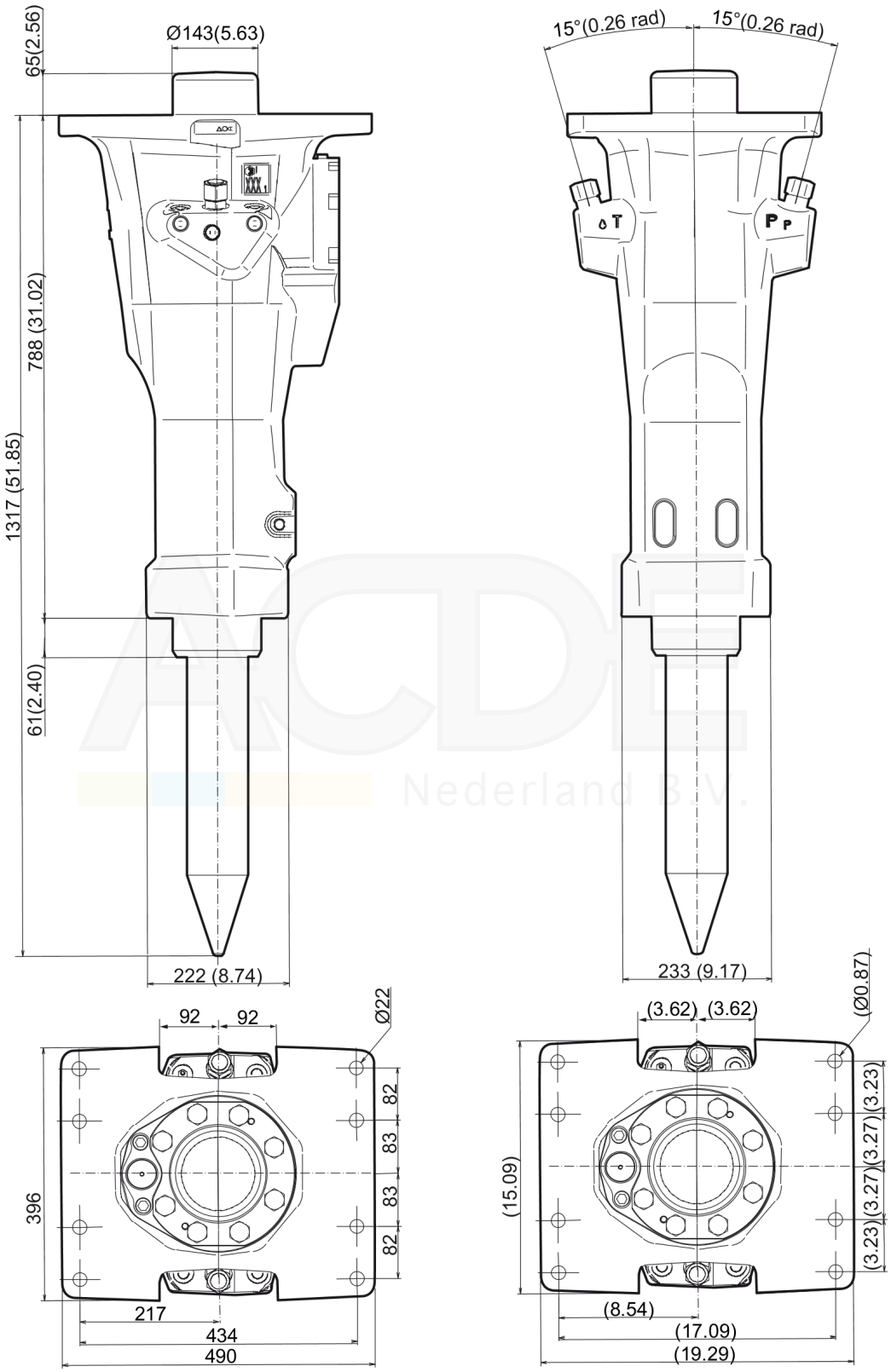

ACDE
Nederland B.V.

ACDE
Nederland B.V.

Any unauthorized use or copying of the contents or any part thereof is prohibited. This applies in particular to trademarks, model denominations, part numbers, and drawings.