SB 552

Spare parts list

Hydraulic breaker

SB 552 from s/n BES043707

© 2015 Construction Tools PC AB | No. 9800067601j| 2015-05

General information

This spare parts list applies to the following:

Part number	Description
8460030080	SB 552

Use only authorized parts. Any damage or malfunction caused by the use of unauthorized parts is not covered by Warranty or Product Liability.
Any unauthorized use or copying of the contents or any part thereof is prohibited. This applies in particular to trademarks, model denominations, part numbers, and drawings.

Instructions for use
This spare parts list contains no safety regulations and is merely intended to assist in the ordering of spare parts.
For information about operating, servicing, or repairing, the relevant Safety and operating instructions must be consulted at all costs.
Please observe the safety instructions listed in the relevant Safety and operating instructions!

ACDE
Nederland B.V.

Contents

Spare parts list
Spare parts list SB 552 1
Optional parts - Bushing oversize, complete 5
Optional parts - Restrictor, complete 7

Tightening torque
Tightening torque 9

Working tools
Working tools SB 552 11

Accessories
Optional equipment 14
Hydraulic hoses 17

Kits
Label kit 19
Lower hammer part kit 21
Accumulator repair kit 23
Seal kit 25

Dimensions
Dimensions (mm) 27

ACDE
Nederland B.V.

Spare parts list Spare parts list SB 552

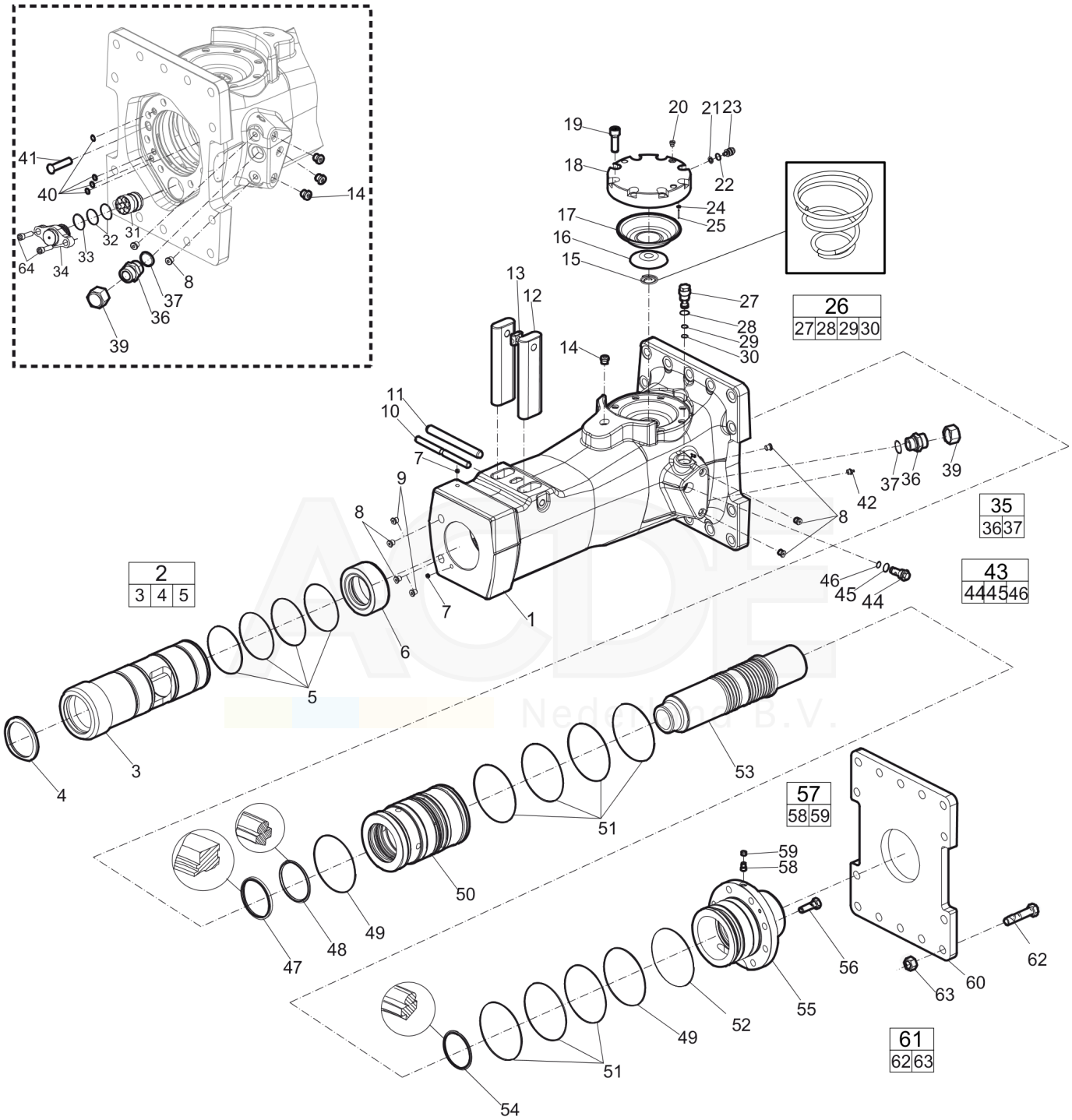

Item	Part No.	Name	Qty	L
1	-	Breaker body	1	
2	3315302980	Bushing, complete	1	
3	--	Bushing	1	
4	3315303000	Scraper ring	1	
5	0663210823	O-ring, 119.5 x 3 mm, 4.70 x 0.12 in.	4	
6	3315302800	Stop ring	1	
7	0686100009	Plug, Ø10 mm, Ø0.39 in.	2	
8	0686644207	Plug, VSTI R 1/4-ED	7	
9	3315395200	Water nozzle	2	
10	3315319100	Lock pin	1	
11	0108169129	Spring pin, option, 16 x 180 mm, 0.63 x 7.09 in.	1	
12	3315305900	Tool retainer	2	
13	3315141900	Lock buffer	1	
14	0686371801	Plug, VSTI R 3⁄8 - ED	4	
15	3315303500	Coil spring	1	
16	3315303201	Diaphragm support	1	
17	3315416300	Diaphragm	1	
18	3315303100	Diaphragm cover	1	
19	0211196544	Hexagon socket screw M16 x 50 mm Screw with extra high fatigue strength.	8	
20	0686371805	Plug VSTI R 1⁄8-ED	1	
21	3115329002	Seal ring 8 x 14 x 2.4 mm (90 shore), 0.31 x 0.55 x 0.09 in.	1	
22	0663212000	O-ring 13.3 x 2.4 mm (70 shore), 0.52 x 0.09 in.	1	
23	3315366000	Charge valve	1	
24	0663211400	O-ring 7.3 x 2.4 mm (90 shore), 0.28 x 0.09 in.	1	
25	0101414000	Parallel pin D4 x 25 mm, D4 x 0.98 in.	1	
26	3315365800	Pressure relief valve, complete	1	
27	--	Pressure relief valve	1	
28	9125621100	O-ring, 20.35 x 1.78 mm , 0.80 x 0.07 in. (90 shore)	1	
29	0663210421	O-ring, 14.0 x 1.78 mm , 0.55 x 0.07 in. (90 shore)	1	
30	0661200401	Back-up ring	1	
31	3315312100	Control valve	1	
32	0663990026	Seal ring, 51.3 x 54.3 x 3 mm, 2.02 x 2.14 x 0.12 in.	2	
33	0663211491	O-ring, 47.29 x 2.62 mm Polyuretan, 1.86 x 0.10 in.	1	
34	3315362820	Valve cover	1	
35	0580001845	Nipple, complete	1	
36	--	Nipple	1	
37	0664000005	Sealing ring, 29.70 x 35.70 x 1.50 mm, 1.17 x 1.41 x 0.06 in.	1	

ACDE Nederland B.V.

This page intentionally left blank

ACDE Nederland B.V.

Item	Part No.	Name	Qty	L
39	0686825030	Cap	2	
40	0665090014	Seal, SCR 10 x 16 x 2.4 mm	4	
41	3315336700	Plug	1	
42	0544215300	Grease nipple, ISO 7-R 1⁄4	1	
43	3315369655	Restrictor standard, complete	1	
44	--	Restrictor, standard, Ø7.7 mm, Ø0.3 in.	1	
45	0663210421	O-ring, 14.0 x 1.78 mm , 0.55 x 0.07 in. (90 shore)	1	
46	9125621100	O-ring, 20.35 x 1.78 mm , 0.80 x 0.07 in. (90 shore)	1	
47	0665909965	Wiper	1	
48	0665070134	Piston rod seal	1	
49	0663990027	Beanseal, 159.4 x 162.3 x 3 mm, 6.28 x 6.39 x 0.12 in.	2	
50	3315302500	Liner	1	
51	0663211303	O-ring, 149.5 x 3 mm, 5.89 x 0.12 in.	7	
52	0663211506	O-ring, 151.64 x 1.78 mm , 5.97 x 0.07 in. (70 shore)	1	
53	3315302400	Piston	1	
54	0665070133	Piston rod seal	1	
55	3315303410	Back head	1	
56	0147155503	Hexagon head screw	8	
57	3315244881	Check valve, complete	1	
58	--	Check valve	1	
59	3315280800	Valve rubber	1	
60	3315307700	Base plate	1	
61	3315323990	Bolt kit	1	
62	--	Screw	14	
63	--	Nut, M20	14	
64	0211110467	Screw, M20 x 75 mm	1	

ACDE Nederland B.V.

Spare parts list Optional parts - Bushing oversize, complete

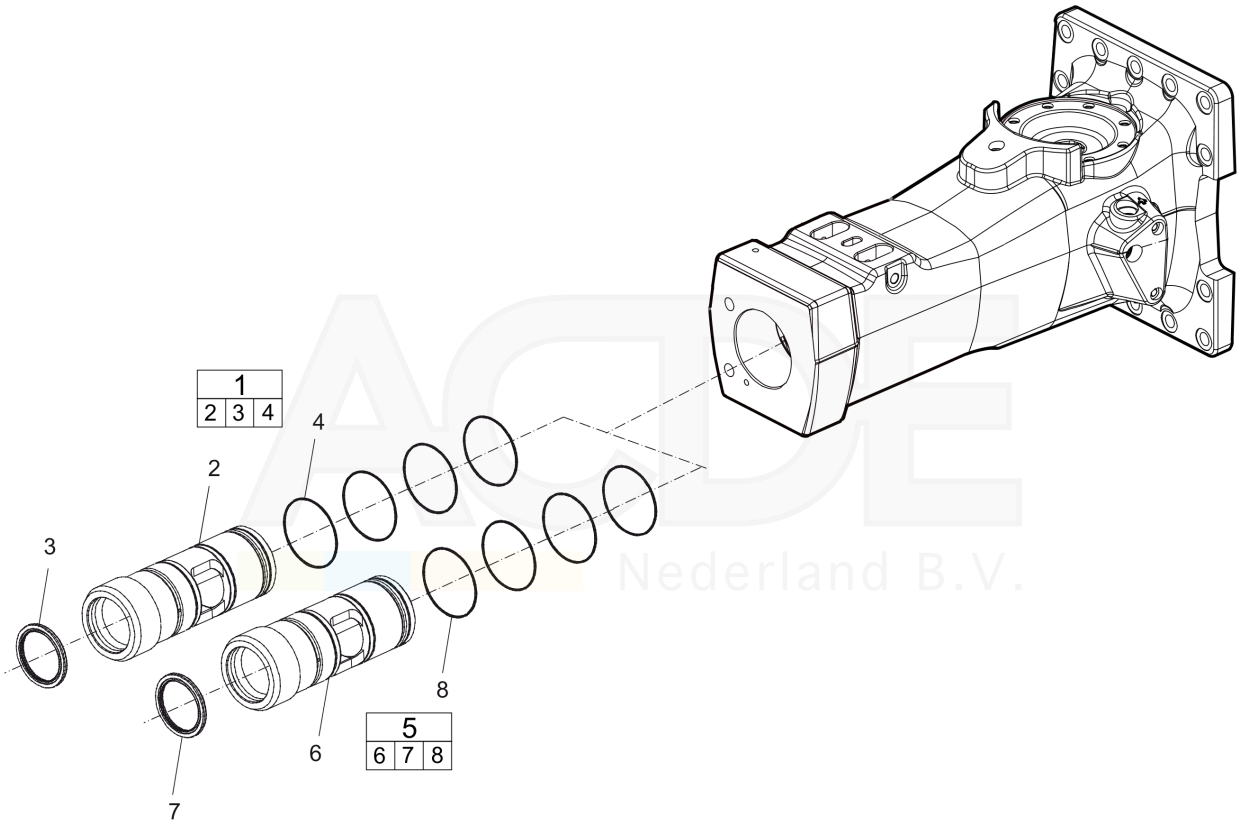

Item	Part No.	Name	Qty	L
1	3315302960	Bushing oversize, complete	1	
.2	--	Bushing, Ø 135.5 mm, Ø 5.33 in.	1	
.3	3315303000	Scraper ring	1	
.4	0663211508	O-ring, 119.5 x 3 mm, 4.70 x 0.12 in. (90 shore)	4	
5	3315302963	Bushing oversize, complete	1	
.6	--	Bushing, Ø 137 mm, Ø 5.39 in.	1	
.7	3315303000	Scraper ring	1	
.8	0663211508	O-ring, 119.5 x 3 mm, 4.70 x 0.12 in. (90 shore)	4	

ACDE Nederland B.V.

Spare parts list Optional parts - Restrictor, complete

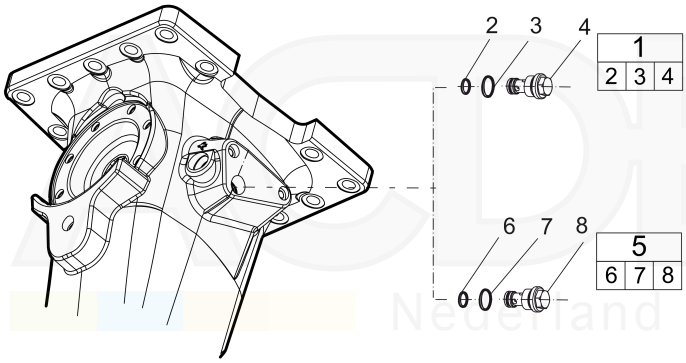

Item	Part No.	Name	Qty	L
1	3315369635	Restrictor, complete	1	
.2	0663210421	O-ring, 14.0 x 1.78 mm , 0.55 x 0.07 in. (90 shore)	1	
.3	9125621100	O-ring, 20.35 x 1.78 mm , 0.80 x 0.07 in. (90 shore)	1	
.4	--	Restrictor, Ø5.4 mm, Ø0.21 in.	1	
5	3315369645	Restrictor, complete	1	
.6	0663210421	O-ring, 14.0 x 1.78 mm , 0.55 x 0.07 in. (90 shore)	1	
.7	9125621100	O-ring, 20.35 x 1.78 mm , 0.80 x 0.07 in. (90 shore)	1	
.8	--	Restrictor, Ø6.0 mm, Ø0.24 in.	1	

ACDE Nederland B.V.

Tightening torque Tightening torque

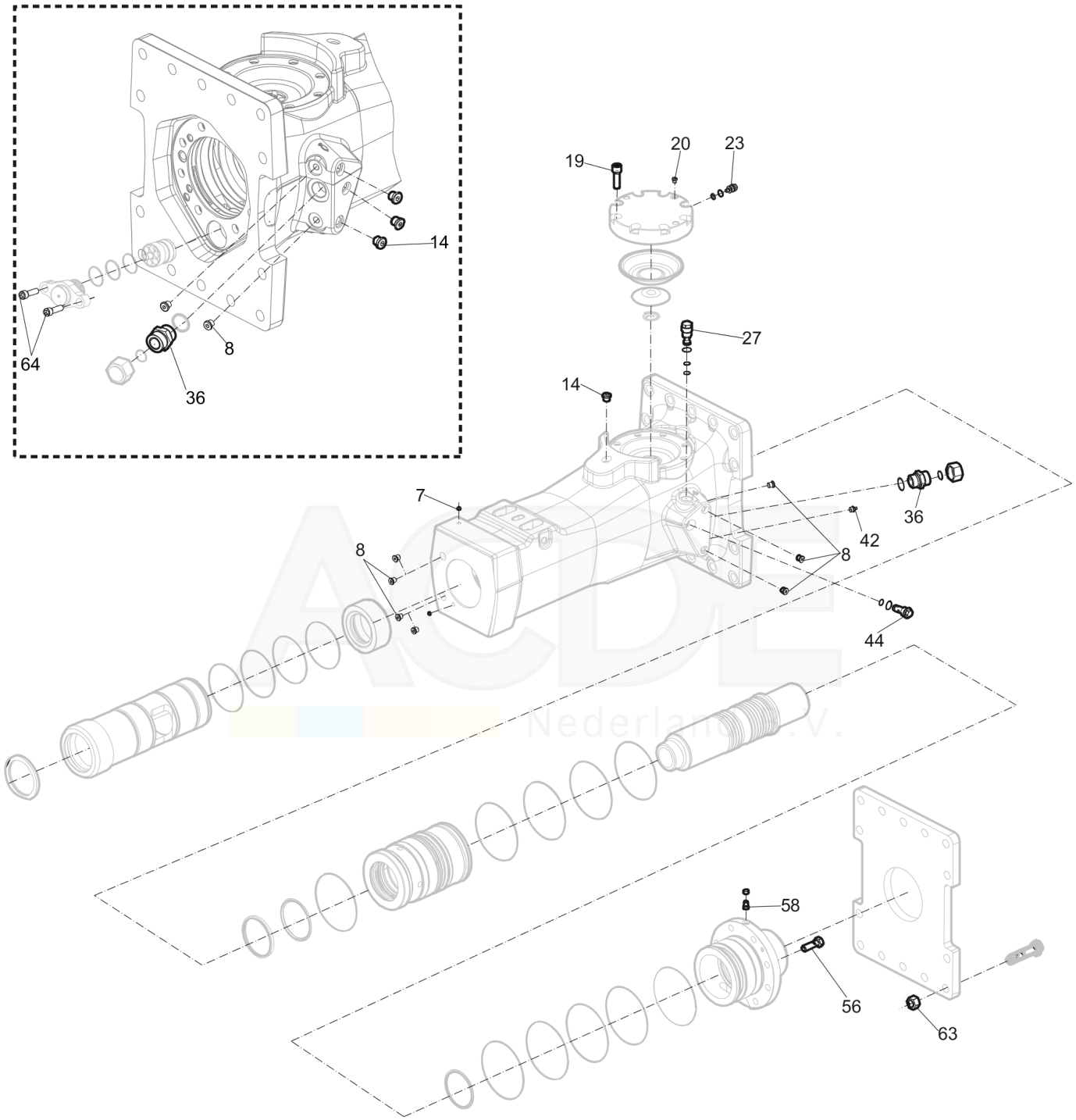

Item	Part No.	Name	Qty	L
8	-	Plug - 30 Nm, use LOCTITE® 243™	-	
14	-	Plug - 80 Nm, use LOCTITE® 243™	-	
19	-	Hexagon socket screw - 300 Nm, use Molykote®	-	
20	-	Plug - 20 Nm	-	
23	-	Charge valve - 20 Nm	-	
27	-	Pressure relief valve - 80 Nm	-	
36	-	Nipple - 315 Nm	-	
42	-	Grease nipple - 30 Nm	-	
44	-	Restrictor, standard - 80 Nm	-	
56	-	Hexagon head screw - 315 Nm, use Molykote®	-	
58	-	Check valve - 30 Nm, use LOCTITE® 243™	-	
63	-	Nut - 400 Nm, use Molykote®	-	
64	-	Screw - 615 Nm, use Molykote®	-	

ACDE Nederland B.V.

Working tools Working tools SB 552

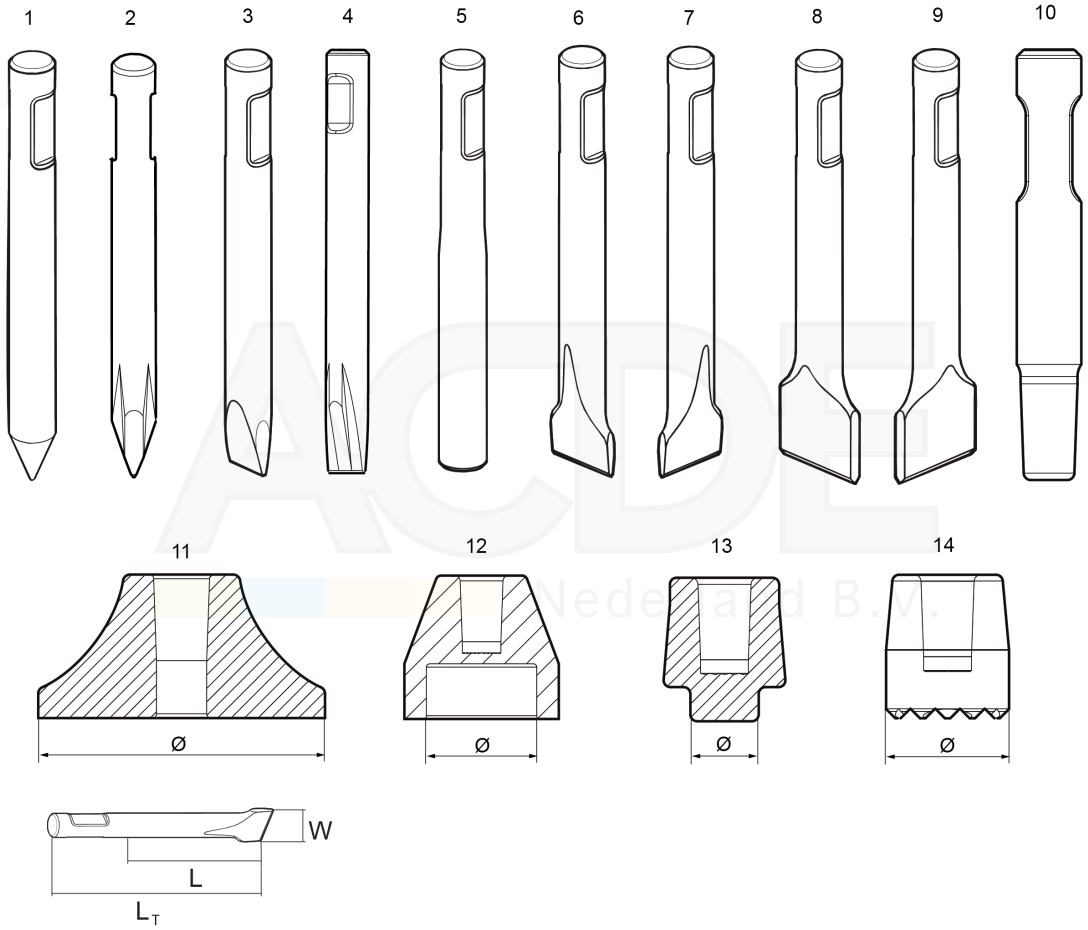

Item	Part No.	Name	Qty	L
1	3083340905	Moil point	1	A
2	3363098258	Moil point (X-profile)	1	B
3	3083340906	Chisel (cross)	1	C
4	3363098259	Chisel (X-profile)	1	D
5	3083340907	Blunt tool	1	E
6	3083340924	Wide chisel (cross)	1	F
7	3083340925	Wide chisel (parallel)	1	G
8	3083340942	Asphalt cutter (cross)	1	H
9	3083340943	Asphalt cutter (parallel)	1	I
10	3315370500	Shaft	1	J
11	3315371200	Tamping pad (square)	1	K
12	3315372000	Post driver pad (round)	1	L
13	3315372600	Pile driver pad (round)	1	M
14	3315373200	Bushing pad (round)	1	N

Comments for Page: Working tools SB 552

(L)OCAL REMARKS

A | L=475 mm, LT=900 mm, Wt=49 kg

L=18.7 inch, LT=35.4 inch, Wt=108 lb

B |L=475 mm, LT=900 mm, Wt=46 kg

L=18.7 inch, LT=35.4 inch, Wt=101 lb

C | W= 100 mm, L=475 mm, LT=900 mm, Wt=51 kg

W=3.93 inch, L=18.7 inch, LT=35.4 inch, Wt=112 lb

D | W=100 mm, L=475 mm, LT=900 mm, Wt=48 kg

W=3.93 inch, L=18.7 inch, LT=35.4 inch, Wt=106 lb

E | L=475 mm, LT=900 mm, Wt=53 kg

L=18.7 inch, LT=35.4 inch, Wt=117 lb

F | W=180 mm, L=475 mm, LT=800 mm, Wt=52 kg

W=7.09 inch, L=18.7 inch, LT=31.5 inch, Wt=115 lb

G | W=180 mm, L=475 mm, LT=800 mm, Wt=52 kg

W=7.09 inch, L=18.7 inch, LT=31.5 inch, Wt=115 lb

H | W=200 mm, L=475 mm, LT=850 mm, Wt=52 kg

ACDE Nederland B.V.

W=7.87 inch, L=18.7 inch, LT=33.5 inch, Wt=115 lb

I | W= 200 L=475 mm, LT=850 mm, Wt=39 kg

W=7.87 inch, L=18.7 inch, LT=33.5 inch, Wt=86 lb

J | LT=900 mm, Wt=53 kg

LT=35.4 inch, Wt=117 lb

K | W=Ø400 mm, , Wt= 80 kg

W=Ø15.75 inch, Wt= 176 kg

L | W=Ø200 mm, Wt= 33 kg

W=Ø7.87 inch, Wt= 73 lb

M | W= Ø150 mm, Wt=26 kg

W=Ø5.90 inch, Wt= 57 lb

N | W=Ø190 mm, Wt=30 kg

W=Ø7.48 inch, Wt= 66 lb

ACDE Nederland B.V.

Accessories Optional equipment

This page intentionally left blank

ACDE Nederland B.V.

NO EXPLODED VIEW
AVAILABLE
FOR THIS BOM

ACDE Nederland B.V.

Item	Part No.	Name	Qty	L
-	0909107100	Grease gun	1	A
-	3363094913	Chisel paste cartridge, 400 g x 12 pcs, 0.88 lb x 12	1	
-	3315383190	ContiLube II micro	1	
-	3315386780	Welding kit, universal	1	B
-	3315386280	Hose kit, universal	1	C
-	3363106447	Chisel paste cartridge, 150 g x 12, 0.33 lb x 12	1	
-	3363094669	Filling device	1	D
-	3315383980	Filling adapter	1	E
-	3363066411	Filling device	1	F
-	3362263900	Chisel paste container	1	G
-	3362263275	Chisel paste container	1	H
-	3360920415	Filling device for accumulator	1	
-	3363094459	Nipple, for charging the accumulator	1	
-	3361329803	Filling hose, for charging the accumulator	1	
-	3315353100	Bushing wear controller	1	

Comments for Page: Optional equipment

(L)OCAL REMARKS

A | For manual greasing with cartridge, 400 g (0.88 lb)

B | For ContiLube™ II micro

C | For ContiLube™ II micro

D | For the 150 g (0.33 lb) Chisel paste cartridges, to use in combination with Chisel paste container 15 kg (33 lb)

E | For the 150 g (0.33 lb)

Chisel paste cartridges, suitable with the filling device for 15 kg (33 lb) and 45 kg (99 lb)

F | For the 150 g (0.33 lb) Chisel paste cartridges, to use in combination with Chisel paste container 45 kg (99 lb)

G | 15 kg (33 lb)

H | 45 kg (99 lb)

ACDE Nederland B.V.

Accessories Hydraulic hoses

NO EXPLODED VIEW
AVAILABLE
FOR THIS BOM

ACE Nederland B.V.

Item	Part No.	Name	Qty	L
-	3360332294	Hydraulic hose, I.D. 20 (0.79 in.), both ends M36 x 2 mm conical seal 24°, length 2,300 mm (90.5 in.)	2	
-	3363085947	Hydraulic hose, I.D. 20 (0.79 in.), both ends M36 x 2 mm conical seal 24°, length 2,800 mm (110.2 in.)	2	
-	3363094964	Additional fitting kit (needed to fit two hoses to the hydraulic breaker)	1	

ACDE Nederland B.V.

Kits Label kit

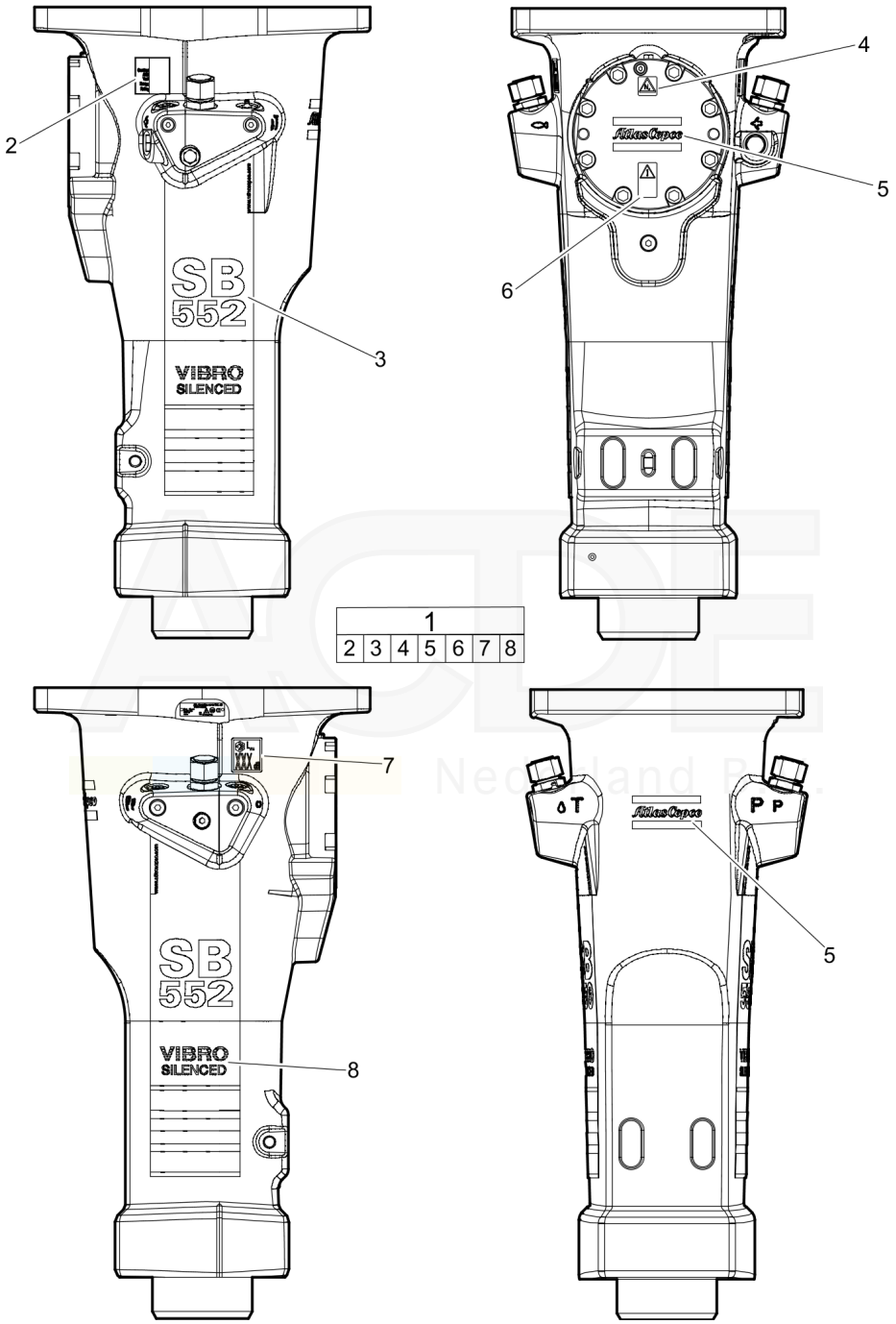

Item	Part No.	Name	Qty	L
1	3315321590	Label kit	1	
.2	--	AEM sign	1	
.3	--	Product label "SB 552"	1	
.4	--	Safety label	1	
.5	--	Product label "Atlas Copco"	2	
.6	--	Safety label	1	
.7	--	Noise level label	1	
.8	--	Label "Vibro Silenced"	1	

ACDE Nederland B.V.

Kits Lower hammer part kit

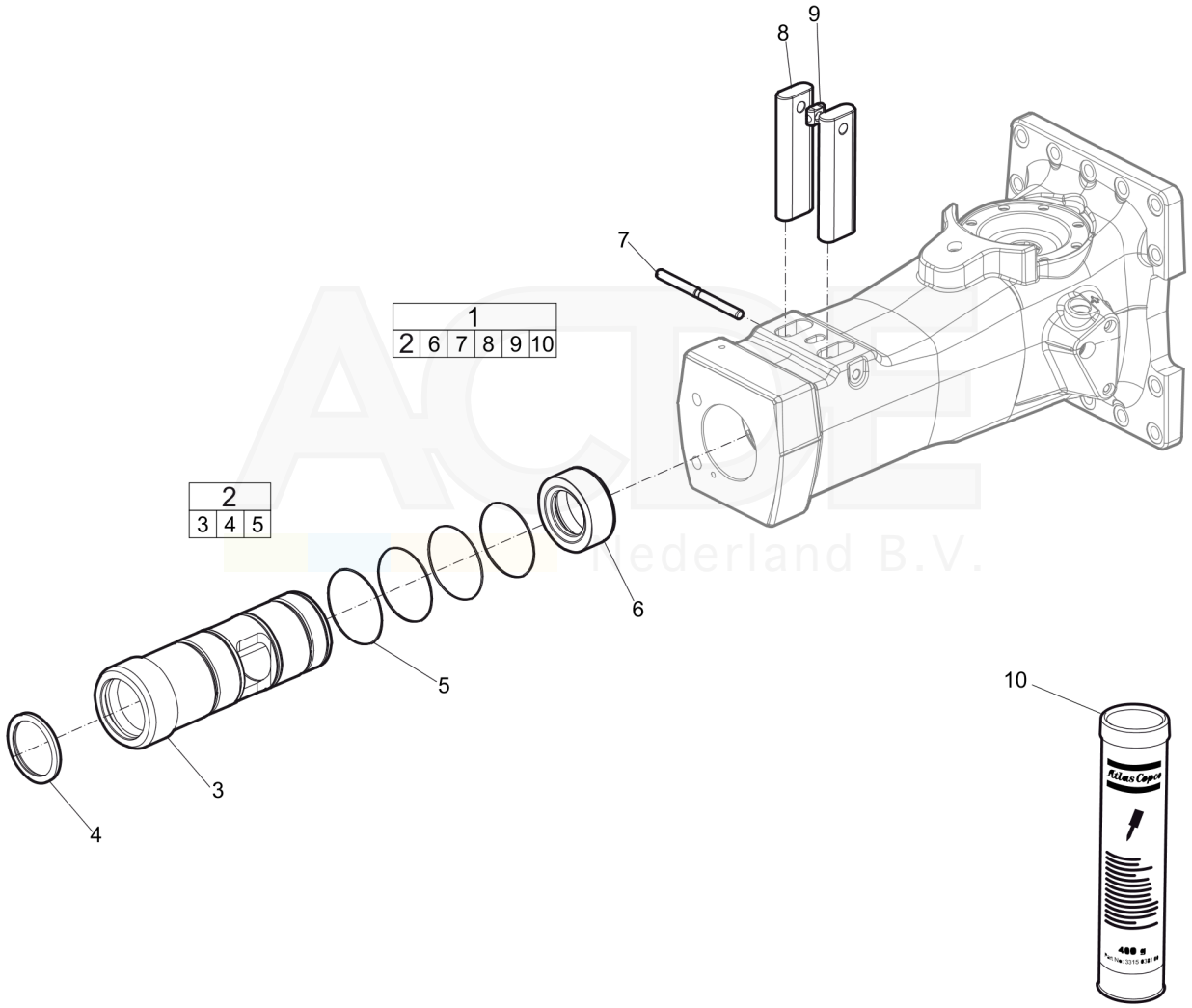

Item	Part No.	Name	Qty	L
1	3315352195	Lower hammer part kit	1	
.2	3315302980	Bushing, complete	1	
3	---	Bushing	1	
4	3315303000	Scraper ring	1	
5	0663210823	O-ring, 119.5 x 3 mm, 4.70 x 0.12 in.	4	
6	3315302800	Stop ring	1	
7	3315319100	Lock pin	1	
8	3315305900	Tool retainer	2	
9	3315141900	Lock buffer	1	
10	--	Chisel paste cartridge, 400 g	1	

ACDE Nederland B.V.

Kits Accumulator repair kit

NO EXPLODED VIEW
AVAILABLE
FOR THIS BOM

ACE Nederland B.V.

Item	Part No.	Name	Qty	L
17	3315303190	Accumulator repair kit	1	
.18	3315303500	Coil spring	1	
.19	3315303201	Diaphragm support	1	
.20	3315416300	Diaphragm	1	
.22	0211196544	Hexagon socket screw M16 x 50 mm Screw with extra high fatigue strength.	8	
.23	0686371805	Plug VSTI R 1⁄8-ED	1	
.24	3115329002	Seal ring 8 x 14 x 2.4 mm (90 shore), 0.31 x 0.55 x 0.09 in.	1	
.25	0663212000	O-ring 13.3 x 2.4 mm (70 shore), 0.52 x 0.09 in.	1	
.26	3315366000	Charge valve	1	
.27	0101414000	Parallel pin D4 x 25 mm, D4 x 0.98 in.	1	
.28	0663211400	O-ring 7.3 x 2.4 mm (90 shore), 0.28 x 0.09 in.	1	

ACDE Nederland B.V.

Kits Seal kit

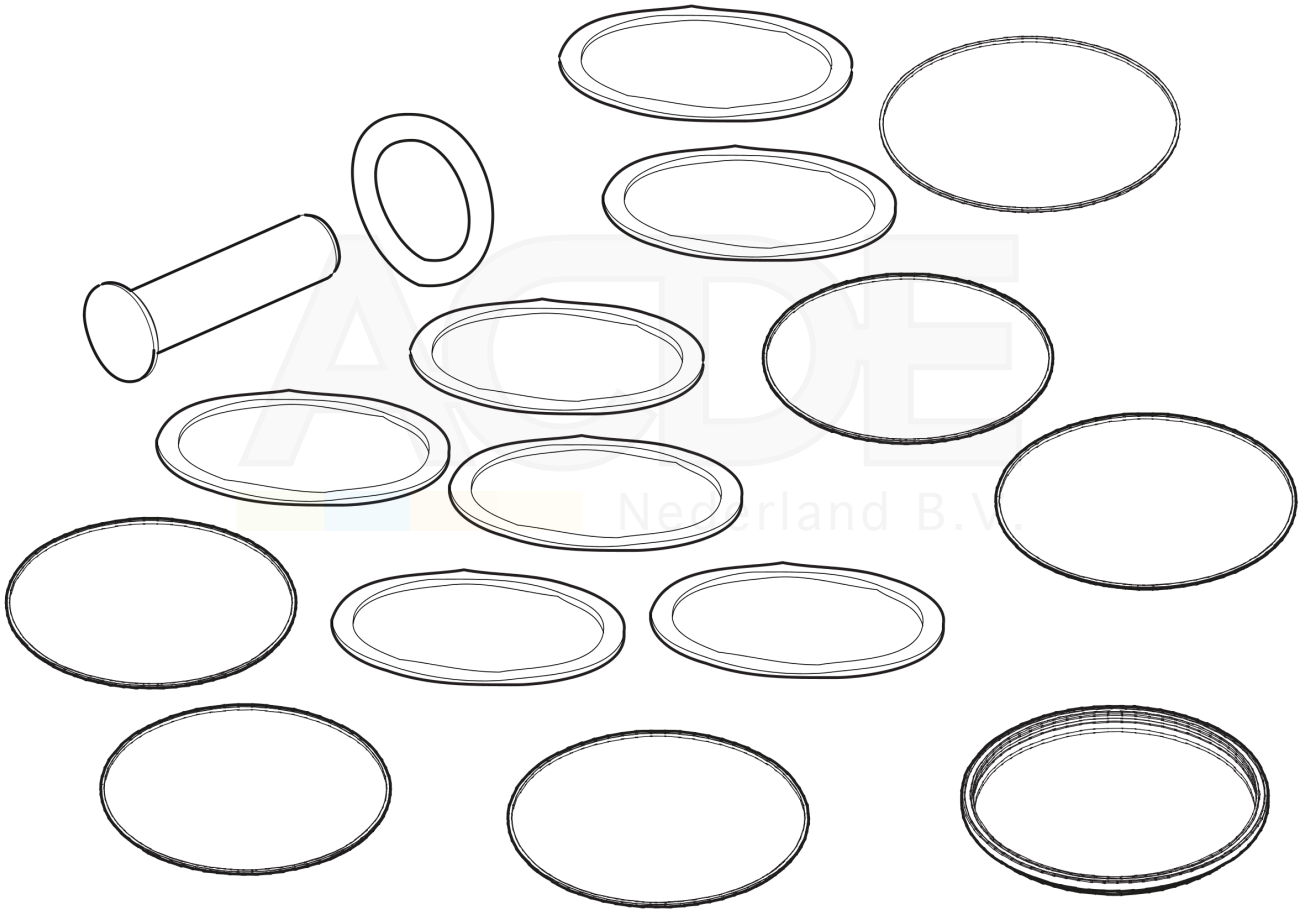

Item	Part No.	Name	Qty	L
1	3315303690	Seal kit	1	
.2	0663210823	O-ring, 119.5 x 3 mm, 4.70 x 0.12 in.	4	
.3	0661100024	Washer	1	
.4	3115329002	Seal ring 8 x 14 x 2.4 mm (90 shore), 0.31 x 0.55 x 0.09 in.	1	
.5	0663212000	O-ring 13.3 x 2.4 mm (70 shore), 0.52 x 0.09 in.	1	
.6	0663211400	O-ring 7.3 x 2.4 mm (90 shore), 0.28 x 0.09 in.	1	
.7	9125621100	O-ring, 20.35 x 1.78 mm , 0.80 x 0.07 in. (90 shore)	2	
.8	0663211491	O-ring, 47.29 x 2.62 mm Polyuretan, 1.86 x 0.10 in.	1	
.9	0661200401	Back-up ring	1	
.10	0663990026	Seal ring, 51.3 x 54.3 x 3 mm, 2.02 x 2.14 x 0.12 in.	2	
.11	0664000005	Sealing ring, 29.70 x 35.70 x 1.50 mm, 1.17 x 1.41 x 0.06 in.	2	
.12	0663211125	O-ring, 23.25 x 1.78 mm, 0.92 x 0.07 in.	2	
.13	0665090014	Seal, SCR 10 x 16 x 2.4 mm	4	
.14	3315336700	Plug	1	
.15	0665909965	Wiper	1	
.16	0665070134	Piston rod seal	1	
.17	0663990027	Beanseal, 159.4 x 162.3 x 3 mm, 6.28 x 6.39 x 0.12 in.	2	
.18	0665211303	O-ring, 149.5 x 3 mm, 5.89 x 0.12 in.	7	
.19	0665070133	Piston rod seal	1	
.20	3315280800	Valve rubber	1	
.21	0663210421	O-ring, 14.0 x 1.78 mm , 0.55 x 0.07 in. (90 shore)	2	
.22	0663211506	O-ring, 151.64 x 1.78 mm , 5.97 x 0.07 in. (70 shore)	1	
.23	3315303000	Scraper ring	1	

ACDE Nederland B.V.

Dimensions Dimensions (mm)

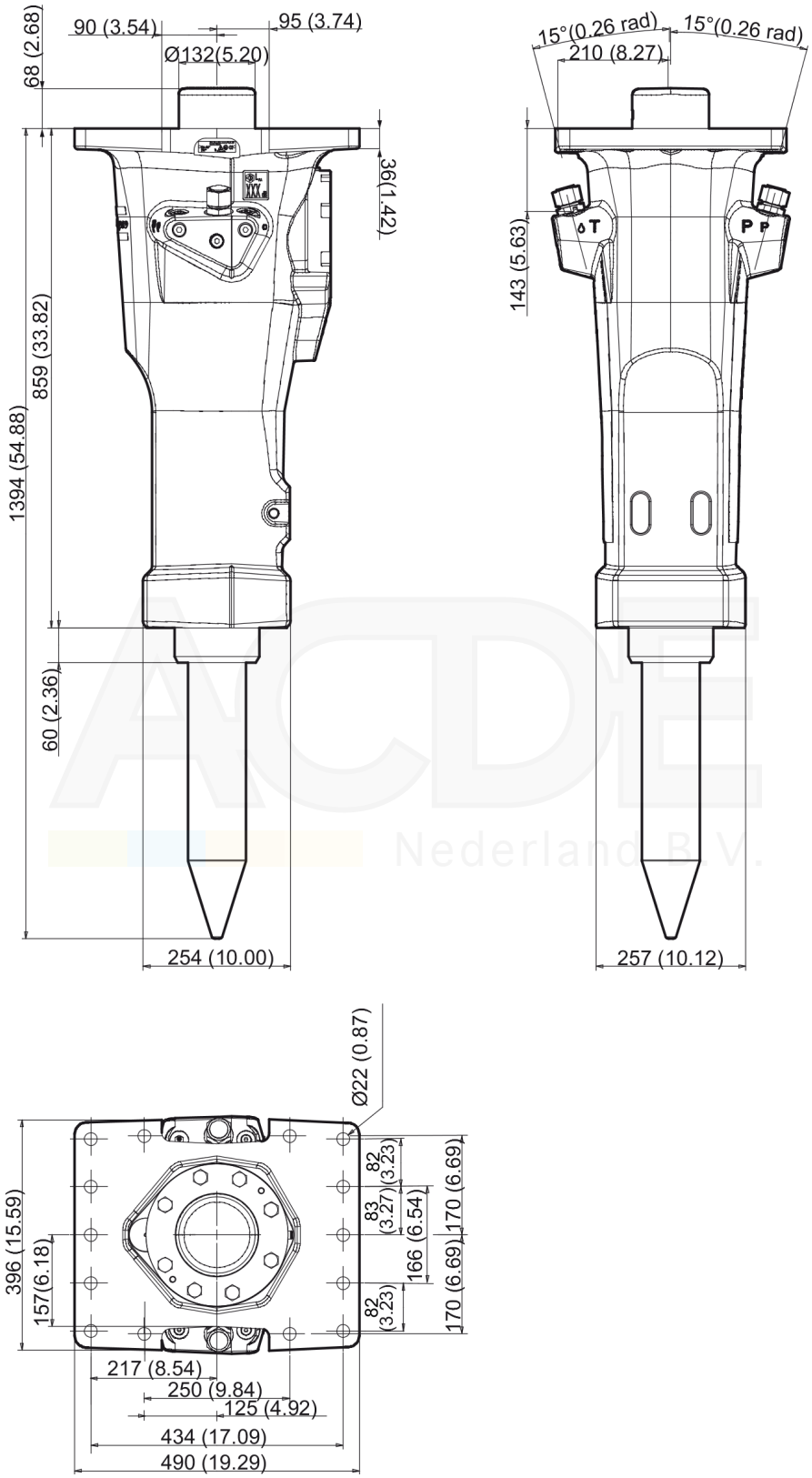

ACDE
Nederland B.V.

ACDE
Nederland B.V.

Any unauthorized use or copying of the contents or any part thereof is prohibited. This applies in particular to trademarks, model denominations, part numbers, and drawings.