CATALOGUE USE - MAINTENANCE AND SPARE PARTS

Hydraulic Monoblock Breaker
DMS 50

Before carrying out any operation with or on the machine, you must read carefully and understand each individual instruction written in this manual

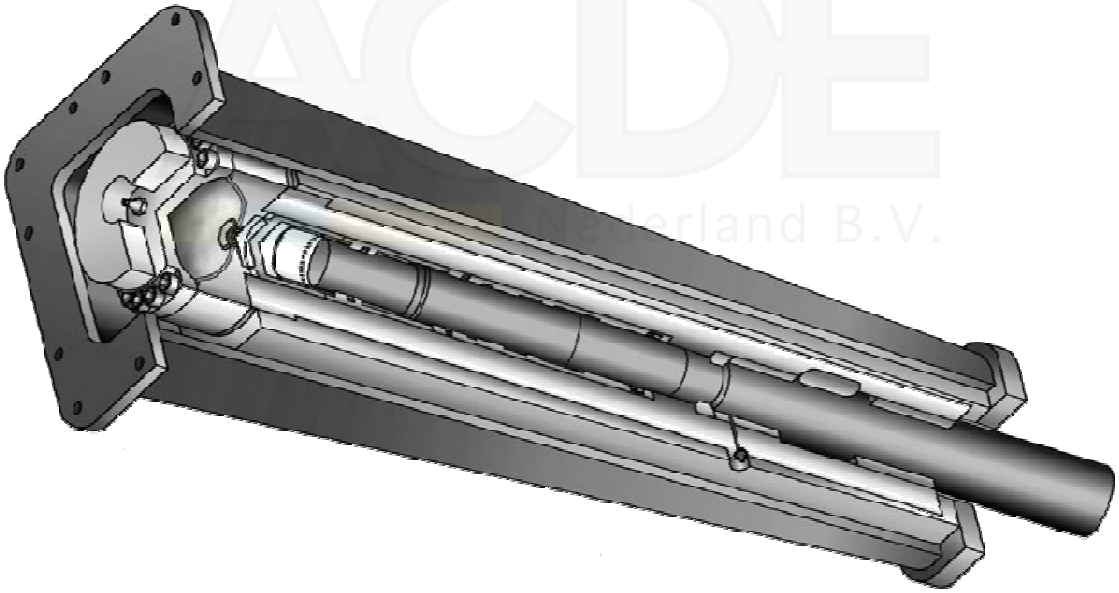

socomec S.P.A.
SUPERPOWER IN ACTION

SINCERT
CERMET
SISTEMA DI GESTIONE CERTIFICATO
REG. N. 1735-A
UNI EN ISO 9001:2000

43014 Medesano (Parma) Italia - Strada Ferrari, 38
Phone +39 0525 - 420929 a.a. - Fax +39 0525 - 420375
http://www.socomecspa.com
E-mail: info@socomecspa.com

CE

This manual is reserved by law and it is formally forbidden to reproduce or to give to any third part without explicit authorization by
SOCOMEC S.p.A.

The equipment can be modified so that some details can be different from those shown herein; nevertheless this cannot be prejudicial for the texts of the following instructions.

The Instruction manual is an integral part of the machine so it must always accompany the machine until its demolition.
For each demolition always refer to the instructions.

Follow all the instructions in this manual very carefully.

The operators with lack of knowledge of instructions must be prevented from using the machine.

Instructions msu be kept complete and readable in accessible location for operators.

This manual is to be given to any other user or following owner of the equipment.

This equipment can't be put in service if the carrier machine is not declared conform to the CE no. 2006/42 directive.

ACDE
derland B.V.

MANUFACTURER

Socomec S.p.A.
Strada Ferrari, 38
43014 Medesano (PR) - Italy
Phone +39-0525-420929 Fax +39-0525-420375

Socomec S.p.A. is not responsible for any inconvenience, breaking, accident and so on, due to lack of knowledge or to the non-observance of the information given by this manual service.

The same is valid for all those modifications, changes and/or installations of attachments not previously authorized.

1	GENERAL WARNINGS Istruzioni generali	4
2	TECHNICAL FEATURES Caratteristiche tecniche	7
3	TRANSPORT AND INSTALLATION Trasporto e installazione	11
4	USE OF THE HAMMER Uso del martello	13
5	CLEANING, MAINTENANCE AND CHECKS Pulizia Manutenzione e Controlli	18
6	SPARE PARTS Parti di ricambio	24
7	COMPLETE HAMMER EXPLODED VIEW Esploso martello completo	25
8	REQUEST OF SPARE PARTS Richiesta parti di ricambio	28

ACDE Nederland B.V.

1 General warnings

All actions representing a situation of potential danger for the operators are pointed out by the sign reproduced aside.

All actions requiring a special attention are pointed out by the sign reproduced aside.

During the work, non-authorized people must not be allowed to stay in an area, which operating range is less than 20 meters from the hammer. The people in charge of the building site will prevent this from happening.

According to the regulation **2006/42/CE** and subsequent bringing up to date we specify that**: by "Operator" we mean the person or the people in charge of installing, operating, servicing, cleaning, repairing and transporting the machine.**

1.1 Operator safety rules

While working the hammer vibrates: thus it is dangerous to touch it or leave any object on it.
The hammer must be started by the operator whose working position is in front of the control board of the carrier.
The person in charge of the safety rules must give the operator all the instructions for the correct use of the hammer. The operator must also know how the carrier works, enquire about its safety measures and strictly obserre them.

The operator must be familiar with the technical characteristics of the hammer and especially with pressures, oil flow rates, dimensions of the flexible hoses and connections.

Before using the hammer and according to the type of work, the operator must get the following equipments: safety glasses, working gloves, dust-mask, helmet, earmufes, etc..

Large and loose clothes, watches and other types of bracelets are dangerouse.

The operator must not drink make use of alcohol or drugs or medicines which can produce sleepiness while working.

The working area must be indicated and illuminated.

The operator must follow the maintenance program proposed by the manufacturer and make sure that the hammer is in good conditions.

After working, the temperature of the tool can be very high: so it is necessary to leave it to cool before touching it or in any case to protect hands with working gloves.

It is absolutely forbidden to temper with the safety devices and to eliminate or modify the protections.

OPERATOR

The operator is to be a person that is suited to the work and physically and psychologically able to withstand the demands connected with operating the equipment for its intended use. The operator must not allow anyone to approach the machine while it is working, and must not allow the use of external personnel. He is to follow the instructions given to obtain maximum performance, minimum consumption, and maximum safety for himself and for others. Especially in terms of safety, the operator is to scrupulously observe all the instructions given in this manual.

OPERATOR'S POSITION

When the machine is running, the operator must pay particular attention to his own position to prevent this being a source of danger to himself or those nearby. The area surrounding the equipment is divided into two zones:

OPERATOR'S ZONES

These are the zones the operator has to work in, while the equipment is working normally.
The "operator's zones" are to be considered as potentially dangerous areas. In these areas, which are indicated in the drawing below, it is best for the safety of the operator and those nearby, to be very careful when the machine is working. **It is extremely important that all the accident prevention standards indicated are strictly applied.**

DANGEROUS ZONES

These are the areas that anyone not involved in the work is not to approach under any circumstances, while the machine is working.
Plan view of the operator's position

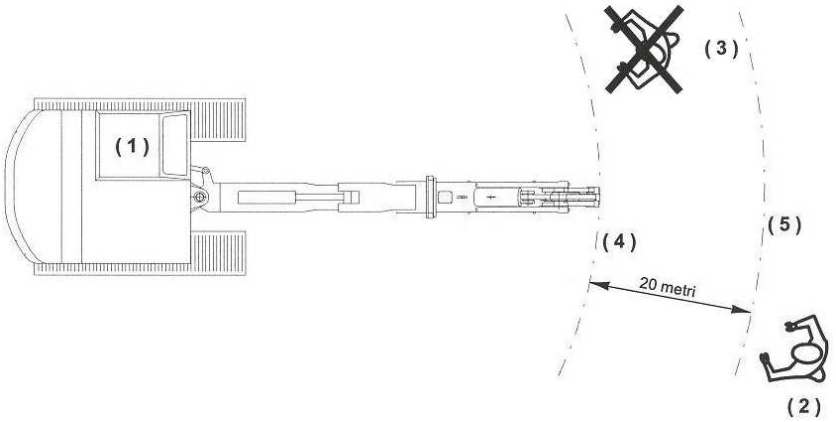

1 = Control area
2 = Person in safety zone
3 = Person in danger zone
4 = Machine's action radius
5 = Limit of safety zone

PERSONAL SAFETY EQUIPMENT

The operator involved in working with the equipment or in the surroundings of the equipment must always be equipped with adequate **Personal Safety Equipment**, that is:

- Hardhat
- Leather working gloves
- Safety shoes
- Earmuffs (when necessary).

In using and handling the equipment bear in mind both the safety devices indicated above, and all that has been described in greater detail in the **GENERAL WARNINGS AND RESIDUAL RISKS** chapter.

In addition the user should affix the following pictograms on the equipment:

Do not repair or adjust while the engine is running.

Symbol	Name
	It is obligatory to use protective goggles.
	It is obligatory to wear work clothing.
	It is obligatory to protect your hearing.
	It is obligatory to wear protective gloves.
	It is obligatory to wear protective shoes.
	It is obligatory to wear a hard hat.

2 Technical features

2.1 Use

The hammer has been projected and manufactured for all types of demolitions, on any kind of material, to drive poles, to cut and break asphalt surfaces.

The manufacture is in accordance with the European Directive 2006/42/CE and with the Noise Directive 2000/14/CE.

Socomec S.p.A. warrants that its machines are manufactured according to the regulation quoted uabove and places the marking “CE” on them.

ACDE Nederland B.V.

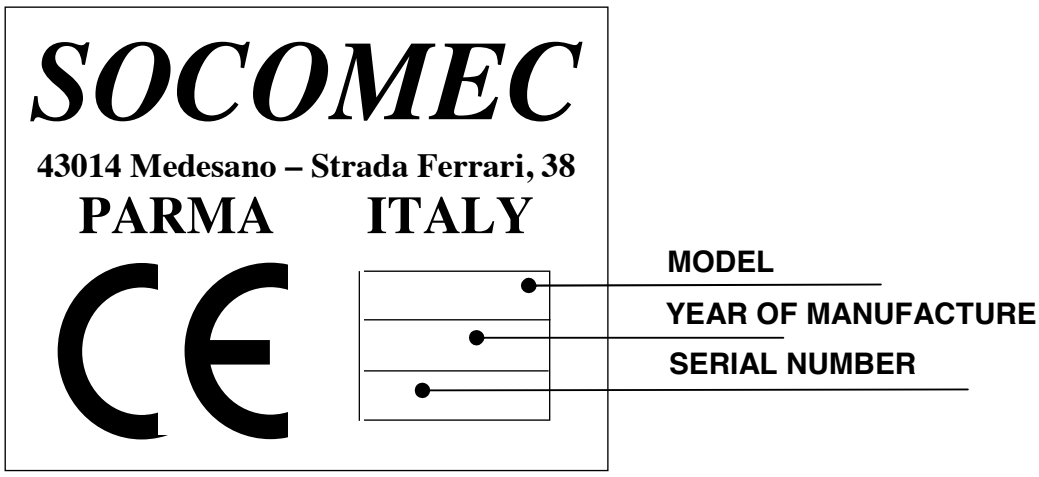

2.2 Technical features DMS 50

Technical features	Unit of measurement	Value
Energy per stroke	J	**120**
Maximum frequency	s/min	**1200**
Maximum oil flow	l/min	**17 - 25**
Maximum working pressure	bar	**120**
Maximum exhaust back pressure	bar	**20 - 30**
Accumulator charging pressure	bar	**32**
Calibration pressure of the hydraulic system maximum valve	bar	**150**
Hammer weight in working conditions	Kg	**60**
Tool weight	Kg	**3**
Weight of the tool retainer	Kg	**0,3**
Pressure line pipe diameter (EN 856 - 4SP)	G	**1/2 “**
Return line pipe diameter (EN 853 - 2SN)	G	**1/2 “**
Tool diameter	mm	**45**
Hammer height with tool without adapting plate	mm	**750**
Maximum length of the tool inner guide (L)	mm	**119**
Maximum diameter in front and back the tool bushings	mm	**48**
Maximum oil temperature in the tank	℃	**80**
Maximum absorbed power	Kw	**5**
Excavator weight	t	**0.7 - 1.2**

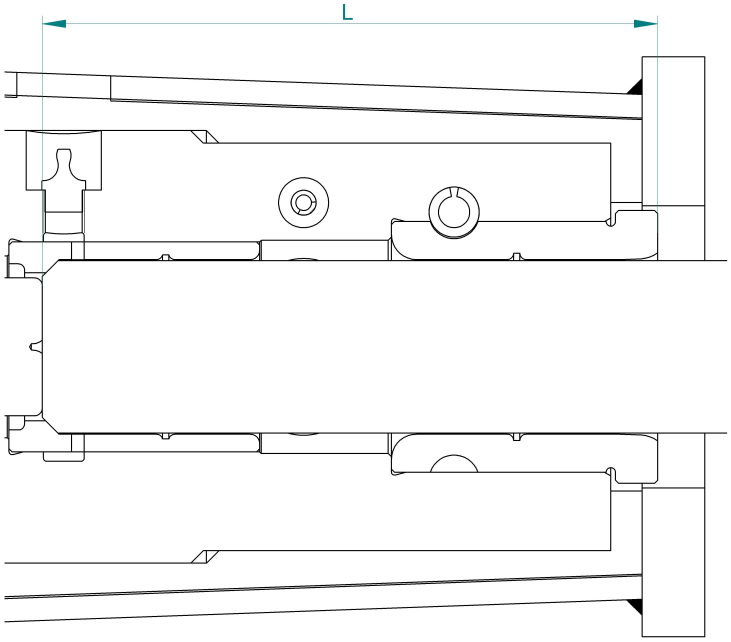

2.2.1 Tightening values:

COMPONENT DENOMINATION	Unit of measurement	VALUE
Accumulator screw	Nm	**50**
Accumulator cover	Nm	**500**

2.3 Optimal environmental working conditions:

Denomination	Unit of measurement	Value (between)
Temperature	℃	**[-5 ; +45]**
Humidity	%	**[40 ; 90]**

ACDE Nederland B.V.

2.4 Overall dimensions

Dimension	Size mm
A	**900**
B	**553**
C	**197**
D	**216**
E	**228**

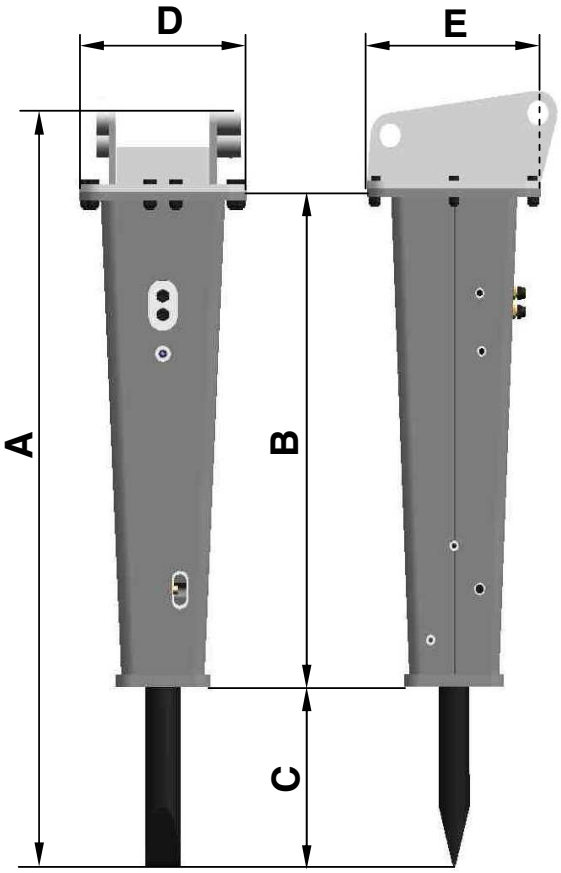

2.6 Hydraulic connection (hoses connection) – DMS 50

2.6.1 Hammer hoses connection

Connect pressure line hose to the entry side IN

Connect return line hose to the exit side OUT

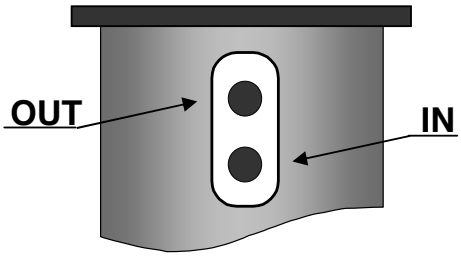

ACDE Nederland B.V.

3 Transportation and installation

The personnel in charge of transportation and installation of the equipment must be acquainted with the following instructions.

Pay careful attention to the weight of the hammer.

3.1 Transport

Check in the technical specifications, the total weight of the hammer, that is together with the adpating plate and the tool already mounted.

In order to move the hammer safely, when it is not coupled to the excavator, it is necessary to have a suitable and safe lifting system (as showed in the picture on the right).

Always use means of transport and lifting, suitable to the weight of the hammer.

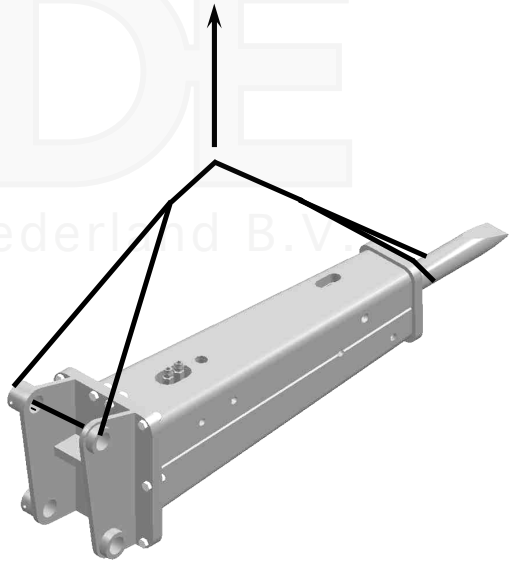

Always move with care: each inappropriate movement can be very dangerous.

Do not pass or stop under the hammer when it is lifted up.

3.2 Coupling on and Uncoupling from the excavator

3.2.1 Coupling

1) Place the hammer horizontally with its axe parallel to the excavator boom on the ground in a stable position.

2) Remove the clamps holding the bucket and take the bucket away.

Insert the boom end in the middle of the adapting plate.

- Line up the hole of the excavator boom with the equivalent one on the adapting plate, insert the first pin and fix its clamps.

- Line up the hole of the connecting rod with the second hole on the adpating plate, insert the second pin and fix well its clamp.

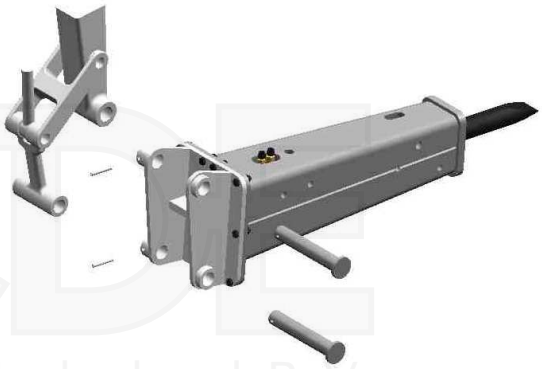

- Stop the hydraulic system of the excavator.

- Take the caps out of the system and in case they have no taps, collect the hydraulic oil in a container, then fix the hoses connecting the hammer to the system (see scheme “Hammer hoses connection” – par. 2.6) and open the oil taps if present.
- stock away the caps of the flexible hoses, which will be used again during the next uncoupling of the hammer.

3.2.2. Uncoupling

- Place the hammer horizontally on the ground in a safe area.

- Stall the hydraulic system of the excavator.

- Close the hoses' flow if possible.

- Disconnect the hoses and close up the ends of the flexible hoses in order to prevent oil leaking and dirt intake.

- Remove the connecting rod pin.

- Remove the excavator boom pin.

- After unblocking the hydraulic system, take the excavator boom out of the adapting plate.

4 Use of the hammer

The operator must follow the manufacturer's instructions.

It is forbidden to use the hammer without the retainer pin for tool.

Use only tools authorised by the manufacturer.

The hammer must be in an open area so that, when it begins to hit, the tool is with no doubt pressed against the surface of the material.

Engine speed

During the inspection of the hammer, the installer determinates the exact number of revs of the excavator engine to which corresponds the appropriate oil flow rate for the hammer.

It is absolutely necessary that the operator respects these datas.

Working with a higher or lower number of revs can cause serious damages to the hammer.

4.1 Instruction for use

The hammer can work in all the positions allowed by the joints of the excavator boom, as long as it is always pressed perpendicularly against the surface of the material to be demolished.

The correct position must be kept during the whole phase of feed of the tool, operating on the controls of the bucket and the forearm.

The operator must release the correct load pressure on the hydraulic pipe line to the hammer: if it is too low, it retains a part of the energy which will be released to the excavator boom that will eventually undergo dangerous vibrations and shakings.

If it is too powerful instead, it can endanger the structure of the hammer, of the metal plate and the tool.

Moreover, while the hammer is working, we advice to shorten the distance between excavator and hammer as much as possible and to remove the cylinder piston rods only partially (C-D strokes never completely out).

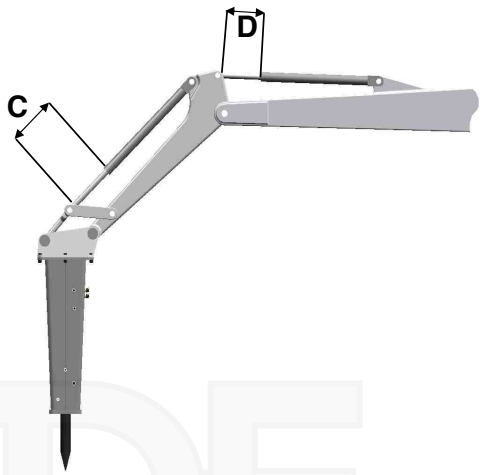

Make sure that the tool does not slip from the surface (see picture). If the tool is placed wrongly or holds weakly on the material, dangerous **blank firing** can occur**.**

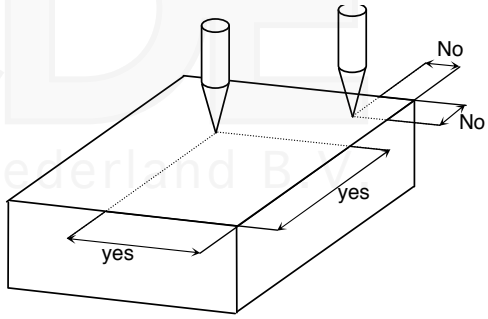

The hammer cannot work into the water if its level exceeds the tool stroke (see picture down under), unless it is specifically made for this purpose.

In case of doubt contact the manufacturer.

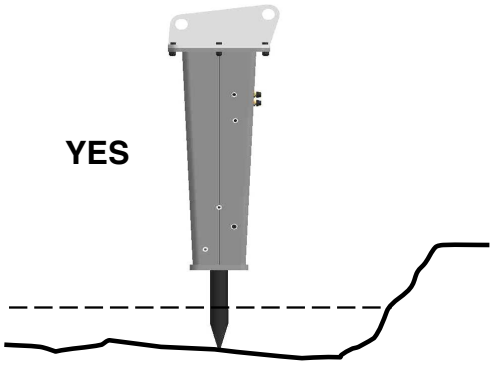

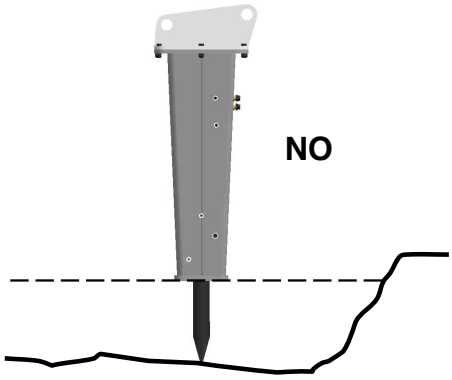

4.2 Operations to be avoided

Avoid that the hammer delivers blank firings. They cause early weariness and chippings to the retainer pin for tool and to the tool itself, which scraps can provoke serious damages. Moreover, due to these blank firings, the tool will break very soon.

The tool cannot be used as a lever to move rocks or debris: this operation can cause the seizing or breaking of the tool, mainly if it is carried out while the hammer is working.

Do not remove big rocks with the help of the hammer frame: some parts can unweld and the plate can warp.

Do not hammer on the same spot for more than thirty seconds. In case of a very hard surface, it is necessary to change position very often until you find a softer ground.

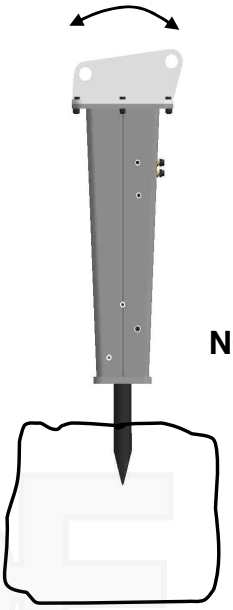

If you insist on the same spot for a long time, the drill can swell up, the tool can seize and the oil can become overheated.

Never forget to pre-heat the oil before beginning to work: particularly in case of low outdoor temperatures, it is a good practice to operate the translation control and those of the central piston of the excavator boom to the end of the stroke, until the oil reaches a temperature of 25-30℃.

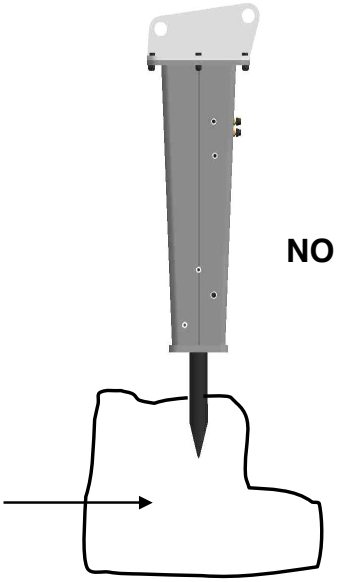

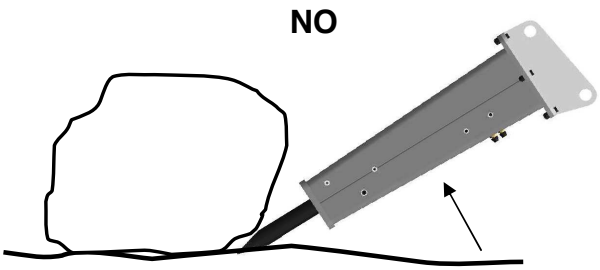

4.3 Replacement of the tool

Before replacing the tool, it is necessary to wear gloves because it overheats during the use.

Place the hammer vertically, touching the ground and lift it up from the ground of a few centimetres so that the boom of the excavator supports the weight of the hammer, but with the tool is still touching on the ground.

Go down from the excavator, after blocking the hydraulic system.

Check the weight of the pin in the technical specifications.

Press the retainer pin with a lever so that the prominent part returns into its seat (1st operation).

With a second lever press on the retainer pin for tool and push it out, almost completely (2nd operation).

- Catch on the prominent part with your gloves and place the pin on the ground.
- Get on the excavator again and unblock the hydraulic system.
- Lift the hammer vertically until the damaged tool slips off.

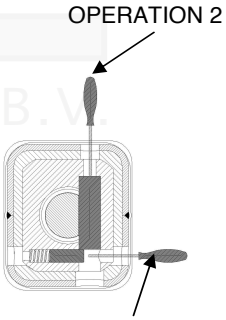

Coupling of a new tool

Place the hammer horizontally on the ground and the tool lined up before it.
Grease well the part that must get into the guide.

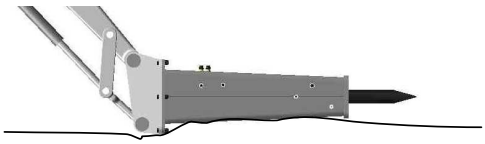

Fit the tool end (the one having the retainer flat/flats) into the guide, manually.
Two operators can be necessary if the weight is more than 30 kgs (check the weight with the technical specifications).

Then push from the other side and fit the tool completely into the guide. Rotate it so that its milled side sets parallel to the pin guide. Insert the retainer pin for tool.

4.4 Types of tools, use and duration

Tools are different based on the different shapes of their terminal parts. There are various types of tools capable of meeting the requirements of every kind of application.

Flat terminal tool (ref. A)

It is suitable for stoke crushing.
Normally used on small and medium hammers.

Chisel terminal tool (ref. B)

Used for mining in general. It is essential in demolitions where a high cutting capacity is required: for example walls, floors and reinforced concrete buildings, fixed section diggings and excavations in stone.

Not suitable for stone crushing.

It covers 80% of the applications on small and big hammers.

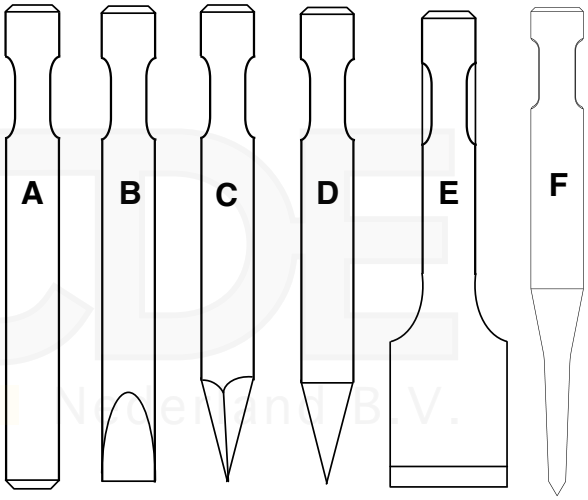

Pyramidal terminal tool (ref. C)

The use is similar to the one described above. To be mounted on small hammers.

Cone-shaped terminal tool (ref. D)

Suitable for the demolition of walls and non-reinforced concrete structures, for stones and quite soft materials. To be mounted on the whole range of hammers.

Small spade terminal tool (ref. E) or asphalt-cutter tool (ref. F)

Suitable for tracing the lines marking the limits of the diggings. To be mounted only on small and medium hammers.

5 Cleaning, maintenance and checks

Never operate on the hammer or on the hydraulic system, when they are under pressure or at high temperatures.
It is always essential to remove the connecting hoses between the hammer and the excavator.

5.1 Cleaning

The hammer does not require particular care. The only precaution to take, consists in preventing the dirt from entering through the hose connections, which must be rigorously closed before any operation of assembly or disassembly.

5.1.1 Maintenance and daily checks

The machine needs some important maintenance, in order to work correctly and for a long time.

Greasing

This operation must be done at least every two hours, introducing an appropriate quantity of grease.

Remember to use a type of grease, which must be:
- resistant to high loads.
- water resistant, anti-rust, anti-corrosive.

Have:
- NLGI-2 penetration
- Dripping point = 200-220 C°
- Temperature of use until t=170-180 C°

It is recommended to use possibly only Socomec grease for a longer life of the parts.

Other checks to be made on the hammer

- Make sure that there are no oil leakages along the tool sank.
- Make sure that no cracks are evident on the frame or on the linking bracket.

5.1.2 Checks to be made on the hydraulic system

Temperature of the hydraulic oil in the tank

Make sure that the temperature, during the work, does not exceed 80℃.
Higher temperature can cause an irregular working condition and also the stopping of the hammer.

Level of the hydraulic oil in the tank

It is absolutely necessary to pay attention to the hydraulic oil level of the excavator tank. In case it is under the lowest limit, the hammer can vibrate or work irregularly.

It is important to check the rigid and flexible hoses in order to find out eventual damages, crushing or oil leaking.

5.2 Weekly maintenance

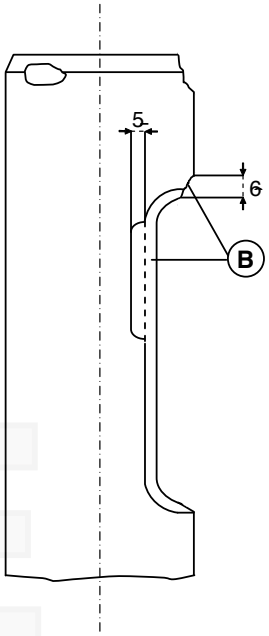

a) Take down the tool in order to determinate possible chippings or cracks in the bush and on the surfaces of the pin for tool.

These marks are proof of insufficient lubrication, use of unsuitable oil or improper use of the hammer.

With the help of a sanding disk, polish the trimmings that can be seen on the surface between the tool and the retainer pin for tool (see points B in the picture).

b) Check the wear of the retainer pin for tool; in the case of excessive wear, invert the assembly or change it.

c) Check the wear of the tool bushings; if the inside diameter is bigger than the value indicated in the technical specifications, contact the technical assistance to change the bushes.

Check on the loosening of the hammer bolts.

It is advisable to check, at regular intervals, possible loosening of the bolts and particularly:

- The screws fixing the head/bracket.
- The screws fixing the flanges/hose joints.

5.2.1 Machine stop

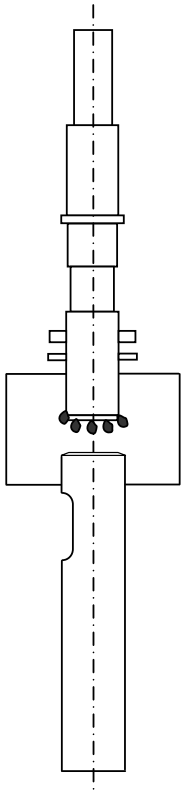

Stop at the end of a work with a hot hammer

During the night, drive the hammer vertically into the ground, so that the condensed water can easily be emptied through the prominent part of the piston, thus avoiding oxidation.

Long term stop

When the hammer is disconnected from the excavator boom and is left standstill for a long time, it is necessary to:

Remove the tool, push the piston (with a tube) as higher as possible, grease abundantly and re-install the tool.
This operation prevents the piston terminal from rusting.

Keep the hammer in a close place sheltered from bad weather.

The monoblock is designed to remain fixed to the outer metal case for the full life of the hammer. Socomec S.p.A. informs that it's possible to take thr monobloc out of the case only for replacement of the polyurethane shells.

5.3 Problems and solutions

Contact Socomec technical assistance for any problem that you cannot solve by just reading the following instructions.

Problem	Cause	Solution (possible on the working site)
Frequency loss with heavy and violent blows.	Very high back pressures on the exhaust line.	Check if the exhaust line hose is partially occluded, if the filters are partially or totally blocked or if the taps are partially or totally closed. Remove the obstacle.
Even though the hammer is lifted up, the tool does not slide downward.	Insufficient greasing or dirt entered between the bushing guides and the tool.	In this case, take down the tool, check the bush and eliminate the seizing marks eventually present. Then clean, grease and install the tool again.
The hammer suddenly stops after four or five blows, just after touching the ground surface.	The piston is at the bottom of the automatic brake, and the tool is completely out.	In this case the material is usually soft. The tool sticks out, but it does not go in again. It is necessary to load the hammer correctly and to try and keep a constant load. It is possible to improve the operation by keeping the hammer as much vertical as possible, while working.
Oil leaking from the hoses connectation block.	The O-Ring is damaged.	Take down the block and change the seals.
Oil leaking from the hoses.	The rubber hose is damaged. The rubber hose is screwed badly.	Change the flexible hose. Screw the hose joints better.

Problem	Cause	Solution (the hammer must be taken to an authorized workshop)
The hammer stops after few blows after being re-installed.	Dirt entered into the hammer through the rubber hoses.	Take down the hammer, clean and eventually change the damaged components.
Oil leaking from the tool.	Seals are worn out. Marks on the piston surface.	Replace seals and the other damaged parts.
The hammer beats with a weak penetration force and there are too many vibrations on the high pressure rubber hose.	The accumulator has lost the pre-charge or the diaphragm is broken.	Restore the correct pressure. In other cases, replace the diaphragm and restore the right nitrogen pressure.
The hammer increases the number of blows, but the power decreases.	The tool support seat (support ring) is worn out. The piston shortens the stroke.	Make sure that the tool support seat (support ring) is intact. So proceed as follows: 1) Lay the hammer on the ground and trace a mark on the tool at the level of the bush end. 2) Remove the tool and make sure that the value between the mark and the plate end of the tool is lower or equivalent to the one indicated in the technical specifications. If it is higher, it is necessary to change the support ring immediately.

5.4 Technical service

Socomec SpA, at its factory in Medesano (Parma-Italy), can solve any problem concerning the use, maintenance and repair of the hammer.

Socomec SpA can supply the name of the nearest authorized workshop for any type of assistance.

It is absolutely necessary to address to a specialized technical service centre.

5.4.1 Instructions for scrapping

The main materials composing the machine are listed below, with a reference to the interested element:

All components of the structure and the moving parts	**Steel**
Accumulator diaphragm	**Rubber**
Upper and lower stroke-end stoppers	**Synthetic rubber**
Seals & O-rings	**Rubber & teflon**
Soundproofing materials	**Synthetic rubber**

The accumulator contains nitrogen under pressure. Before scrapping, exhaust the nitrogen under pressure, which is in the accumulator, through the charging valve.

The various materials composing the machine must be demolished in appropriate dumping grounds.

In any case stick to the laws in force in the country where the hammer is used.

5.5 Warranty

The producer assures the customer a warrantee term which is foreseen in the contract of purchase.

The customer will lose his rights on warranty, if he does not comply with the terms of payment (even only one), or if the breakdowns are caused by the customer himself, his employees or others, through: an improper installation (if not made by the manufacturer), inexperience in handling the machine, improper use, bad maintenance, modifications, mending, changes or tampering made without an authorization by the manufacturer.

The warranty decays if non original spare parts are used by the customer (including the tools and the retaining pins for the tool).

All those parts subject to wear and tear, are excluded from warranty.

The warranty, which the producer must grant by law, is limited to the change and mending of parts damaged by the manufacturer himself and this at his own choice.

The report on possible faults must be done by the customer, within 8 days, by registered letter. No compensation for damages is due to the customer.

The faulty parts must be sent to the supplier's factory, carriage free, in order to be inspected and eventually changed or repaired under warranty.

Where the installation is made by the manufacturer, any damage provoked to the customer or others, during the installation, falls on the customer's responsibility.

6 Request of spare parts

For a correct and prompt answer to the various requests of parts, it is absolutely necessary that they are completed with the following details:

a) Exact name and reference number of the parts required (these specifications can be taken in the list written in the following pages);

b) Exact serial number of the hammer for which the spare parts are required.

To order the spare parts use the form at the end of this manual.

ACDE Nederland B.V.

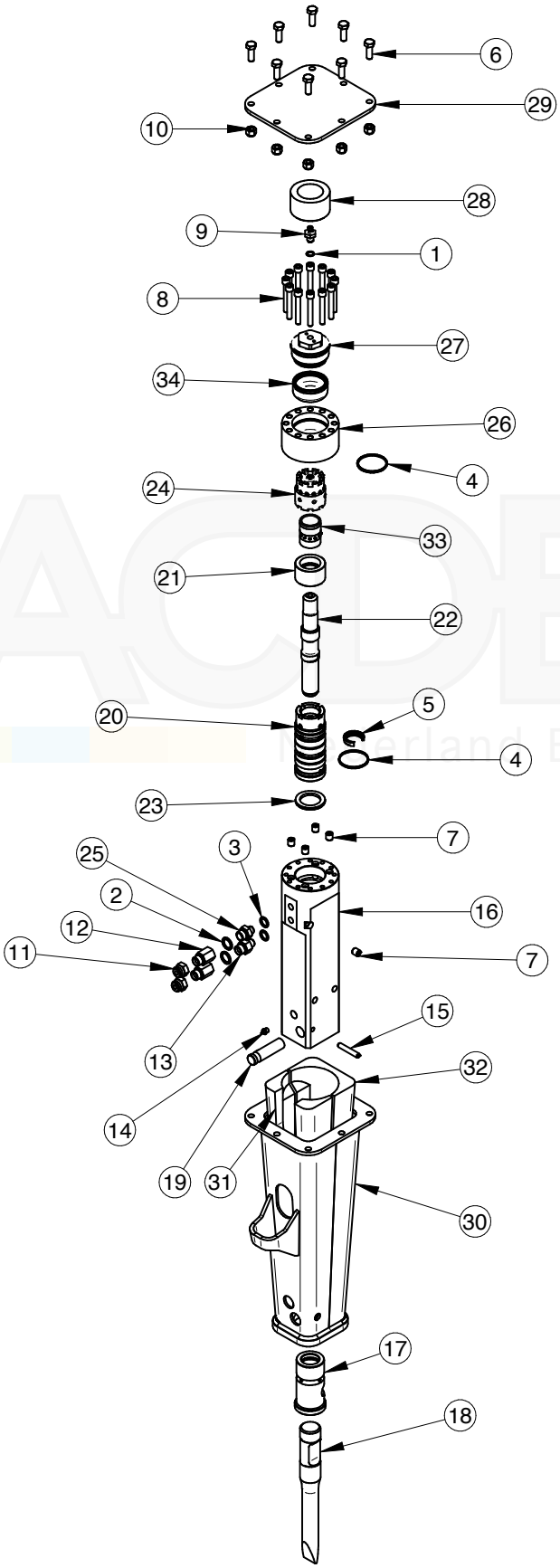
6
29
10
28
9
1
8
27
34
26
4
24
33
21
22
20
5
4
23
7
25
3
2
16
12
11
7
15
13
32
14
19
31
30
17
18

Spare parts

(Refer to the exploded views of the previous pages)

Ref	Quantity	Code	Description
1	1	A.00010366	O-RING
2	2	A.00010430	BONDED WASHER
3	2	A.00010431	BONDED WASHER
4	2	A.00010523	O-RING
5	1	A.00010641	SEAL
6	8	A.00030221	SCREW
7	5	A.00030609	ALLEN PLUG
8	12	A.00030622	SCREW
9	1	A.00053464	NITROGEN CHARGING VALVE
10	8	A.00330085	NUT
11	2	A.00331200	PLUG
12	2	A.00332200	COUPLING
13	1	A.00333404	REDUCTION
14	1	A.00440161	GREASE NIPPLE
15	1	A.03330435	ELASTIC PIN
16	1	B.0041012	MONOBLOC
17	1	B.0041021	SUPPORT BUSH
18	1	B.0041031	CHISEL TOOL
19	1	B.0041051	TOOL RETAINER
20	1	B.0042010	LOWER BODY BUSH
21	1	B.0042020	UPPER BODY BUSH
22	1	B.0042030	PISTON
23	1	B.0042040	BODY BUSH RING
24	1	B.0043010	DISTRIBUTOR BUSH
25	1	B.0043110	REDUCTION
26	1	B.0044010	ACCUMULATOR BASE
27	1	B.0044020	ACCUMULATOR COVER
28	1	B.0044040	UPPER BUFFER
29	1	B.0045040	ADAPTING PLATE
30	1	B.0045993	METAL CASE
31	1	B.0047210	FRONT SHELL
32	1	B.0047220	BACK SHELL

Spare parts

(Refer to the exploded views of the previous pages)

Ref	Quantity	Code	Description
33	1	B.0053020	DISTRIBUTOR VALVE
34	1	B.5004020	DIAPHRAGM

ACDE Nederland B.V.

8 - RICHIESTA DI RICAMBI

Fotocopiare la presente, compilare e spedire per fax a SOCOMEC n. 0525-420375

FORM FOR THE REQUEST OF SPARE PARTS

Photocopy this form, fill in and send it by fax to SOCOMEC no. +39 0525-420375

FORMULAIRE DEMANDE PIECES DE RECHANGE

Photocopier la présente fiche, remplir et envoyer par fax à SOCOMEC n. +39 0525-420375

FICHA PEDIDO REPUESTOS

Fotocopiar esta ficha, rellenarla y enviarla por fax a SOCOMEC n. +39 0525-420375

Cliente / Customer / Client / Cliente _____

Via / Street / Rue / Calle _____

Città / Town / Ville / Ciudad _____

C.A.P. / Postcode / Code postal / C.P. _____

Stato / State / Etat / Pais _____

P. IVA / V.A.T. / T.V.A. / IVA _____

N. Tel e fax _____

Martello / Hammer / Marteau / Martillo _____

Matricola / serial number / numéro de série / numero de matrìcula _____

Rif / rif. / rèf / ref.	***Cod. / code /code / codigo***	***q.tà / q.ty / q.tè / cantidad***	***descrizione/ description description/descripcìon***

Timbro e firma
Stamp and signature
Timbre et signature
Sello y firma

_____

ACDE Nederland B.V.